Application Report
SNOSB76C–December 2010–Revised May 2013

AN-2121 SolarMagic™ SM3320-BATT-EV Charge Controller Reference Design

ABSTRACT

The SM72442 MPPT digital controller and SM72295 photovoltaic full bridge drivers are designed to control high-efficiency DC/DC conversion used in photovoltaic applications. This application report details the usage of those devices in a battery charging application. The reference design is meant to provide support for a wide variety of implementations, however, unless otherwise noted, this reference design system is shown charging a 12V commercial automotive lead acid battery.

Contents

1 Charging Profile 3
2 Features 3
3 Quick Setup Procedure 4
4 10V Power Supply 4
5 DC/DC Converter 5
6 Programmable Modes/Gain Settings 6
7 Current Sense Gains and Offset 6
8 Start-Up Circuitry 7
9 Output FET Disabling 8
10 Output Current Regulation 9
11 Voltage Regulation 9
12 MPPT 10
13 Microcontroller Functions 11
13.1 Normal Operation 11
13.2 Start-Up Operation 11
13.3 Safety Feature 11
14 Microcontroller Program Code 13
14.1 Function: check_lead_acid() 14
14.2 Function: Main() 14
14.3 Function: get_i2c_data 14
14.4 Function: send_i2c_command(char number) 15
14.5 Function: Set_Voutmax() 15
14.6 Function: Check_low_current() 15
15 Charging a Li-ion Battery 15
16 Bill of Materials 17
17 Charge Controller System Schematic 19

List of Figures

1 Lead-Acid Charging Profile 3
2 System Connection 4
3 10V Power Supply 4
4 DC/DC Converter Stage 5
5 Buck Gate Drive Signals From SM72442 5

SolarMagic is a trademark of Texas Instruments.
All other trademarks are the property of their respective owners.

Copyright © 2010–2013, Texas Instruments Incorporated

6 Switch Nodes in Buck Mode 5
7 Boost Gate Drive Signals From SM72442 6
8 Switch Nodes in Boost Mode 6
9 Start-Up Boost Circuitry 7
10 Start-up Circuit Timing Diagram 8
11 Start-up $V_{Panel} < V_{Batt}$ 8
12 Start-up Detail of Battery Current 8
13 Charging Waveforms During Float 9
14 Battery Charging with $V_{Panel} < V_{Battery}$ (Boost) 10
15 Battery Charging with $V_{Panel} > V_{Battery}$ (Buck) 10
16 Basic Operational Flowchart 12
17 Microcontroller Code Flowchart 13
18 Microcontroller Code Block Diagram 15
19 Li-ion Charge Profile 16
20 Charge Controller System Schematic, Part 1 19
21 Charge Controller System Schematic, Part 2 20

Copyright © 2010–2013, Texas Instruments Incorporated

1 Charging Profile

Figure 1 shows the lead-acid charging profile used in this reference design.

If the battery voltage is very low, a slow charge current is applied and limited until the voltage rises above a pre-set threshold value Vt. The full charge current is then applied. Once full charge is detected on the voltage of the battery, the system switches to a floating charge and maintains the battery voltage at a fixed threshold. At any time, the system will run in MPPT mode if the available power is lower than the power required to achieve voltage or current regulation.

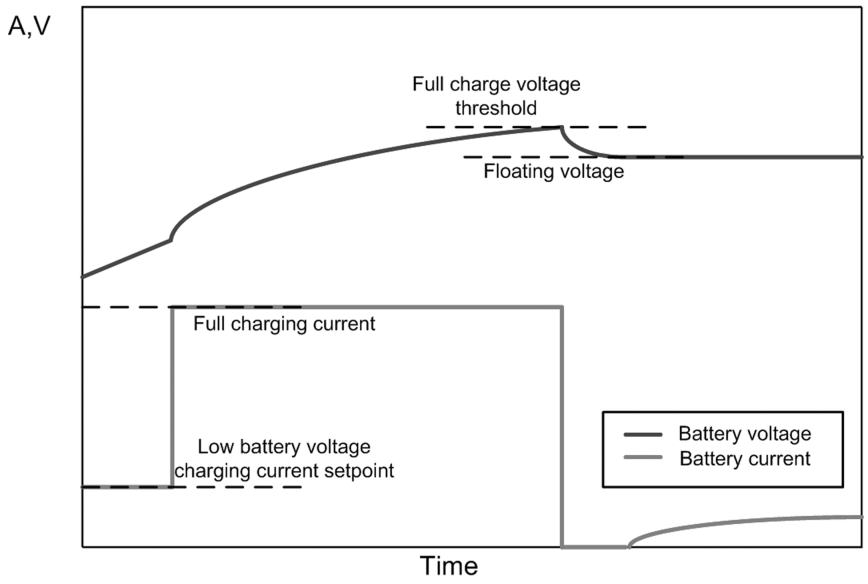

Figure 1. Lead-Acid Charging Profile

2 Features

- 12V Lead Acid Battery
- Vin range = 15V to 45V Vmp (50V Voc)
- Max Input Current: Isc = 11A
- MPPT algorithm for optimized photovoltaic applications
- Up to 9A charging current
- Reverse current protection
- Trickle charge and fast charge mode
- Up to 98% converter efficiency
- 14.2V max charge voltage, 13.5V floating voltage
- Output voltage set-points can be re programmed

Copyright © 2010–2013, Texas Instruments Incorporated

3 Quick Setup Procedure

Step 1: Verify lead-acid battery voltage less than 12V, higher than 10V.

Step 2: Connect battery to output terminals as shown in Figure 2.

Step 3: Connect Solar panel or Solar Array Simulator to the input terminals as shown in Figure 2.

Step 4: Verify battery charging current up to 9A (Average slightly under 9A).

Step 5: If battery current low, verify input operates at maximum power point voltage as specified by the panel manufacturer.

Step 6: Verify charging profile follows the profile shown in Figure 1.

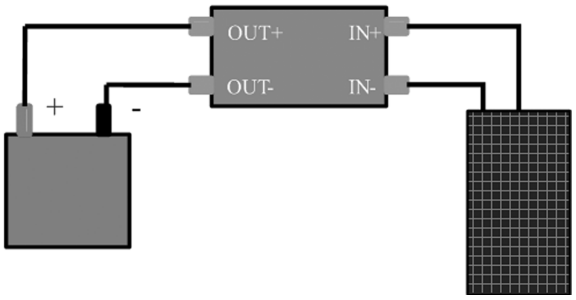

Figure 2. System Connection

4 10V Power Supply

The circuit shown in Figure 3 will provide a 10V power supply rail required to properly bias the SM72295 gate driver. The system can be configured to work with solar panels up to100V (with proper components sizing) and down to 12V Vmp.

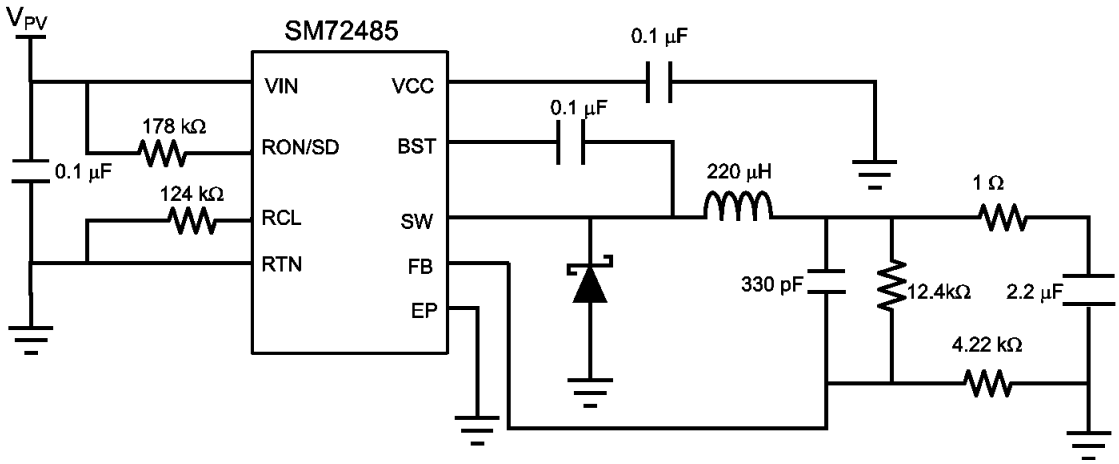

Figure 3. 10V Power Supply

Copyright © 2010–2013, Texas Instruments Incorporated

5 DC/DC Converter

The DC/DC converter stage is a step up/step down four switch converter as shown in Figure 4. This stage transfers the power from the PV panel to the load.

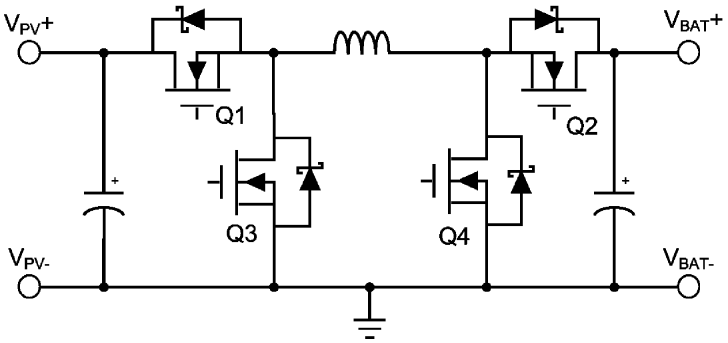

Figure 4. DC/DC Converter Stage

C18, R11, and D15 as shown in the system schematic in Figure 20, form a snubber to reduce ripple on the switch node on the “Buck” side of the converter. C19,R14 and D14 form a snubber circuit to reduce ripple on the switch node of the “Boost” side of the converter.

When the circuit operates in Buck mode, the Boost switch node will issue small pulses at a lower frequency in order to recharge the Bootstrap capacitor of Q2. Likewise, in Boost mode, the Buck switch node will pulse to recharge the bootstrap capacitor of Q1.

Specific design guidelines for the DC/DC converter can be found in the *AN-2124 Power Circuit Design for SolarMagic SM3320 Application Report* (SNOSB84) for power optimizers.

Specific timings related to the switches can be found in *SM72442 Programmable Maximum Power Point Tracking Controller for Photovoltaic Solar Panels* (SNVS689) and *SM72295 Photovoltaic Full Bridge Driver* (SNVS688).

The waveforms in Figure 5 through Figure 8 are examples of the switching signals of the DC/DC converter stage.

If the system is to be used at elevated power levels causing high temperature increases in MOSFETs Q1, Q2, Q3, and/or Q4, we recommend the use of a proper heatsink for the MOSFETs, especially at higher ambient temperatures. Care must be taken to prevent electrical contact between the drains of the MOSFETs in the process of proper heatsinking.

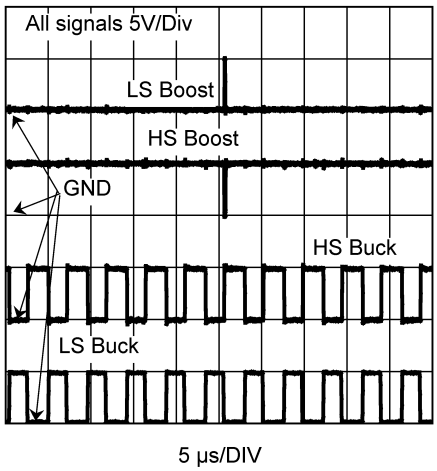

Figure 5. Buck Gate Drive Signals From SM72442

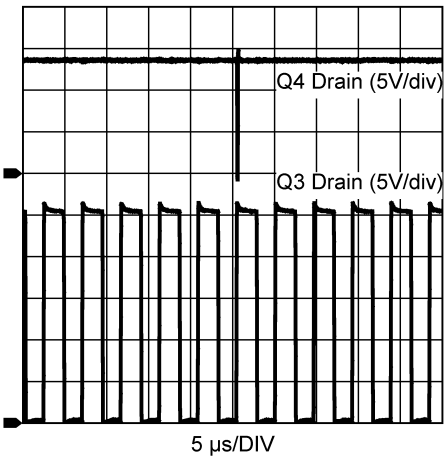

Figure 6. Switch Nodes in Buck Mode

Copyright © 2010–2013, Texas Instruments Incorporated

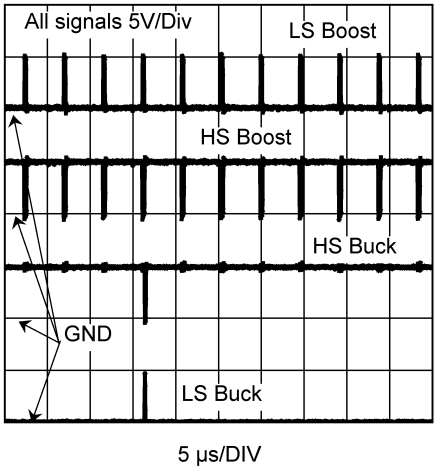

Figure 7. Boost Gate Drive Signals From SM72442

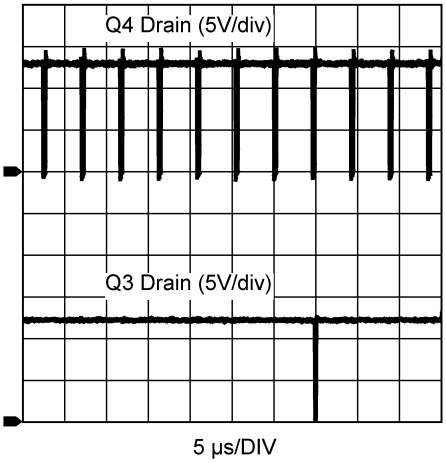

Figure 8. Switch Nodes in Boost Mode

6 Programmable Modes/Gain Settings

The voltage dividers for the output voltage sensing are set to ensure high resolution of the output voltage while providing a safe voltage (<5V) for the SM72442 and microcontroller.

The default resistor setting in this reference design sets a full scale of 30V.

The programmable modes of the SM72442 used in this design are as follows:

- VADC2 = 5V (50% of 4sec in BB)
- VADC6 = 5V (startup at 0mA)
- VADC0 = 0V. This value provides an initial output voltage limit of 19V. However, this limit will be modified by the microcontroller through I2C before the controller begins supplying the battery.
- VADC4 = 5V. Current limiting will be done externally so the max current limit can be set at full scale.

7 Current Sense Gains and Offset

The gain of the current sensing circuit depends on the application. In our system it was set with a gain of 0.44 V/Amps. The gain is set by a pull-down resistor at the output of IOUT (12) and IIN (3) pins of the SM72295 as stated in the data sheet of the device.

Copyright © 2010–2013, Texas Instruments Incorporated

8 Start-Up Circuitry

If the panel voltage is lower than the battery voltage, a start up circuit (Figure 9) is required to force the duty cycle high enough to create a flow of current to the battery. Once current is established, the circuit can be turned off to allow MPPT operation to perform.

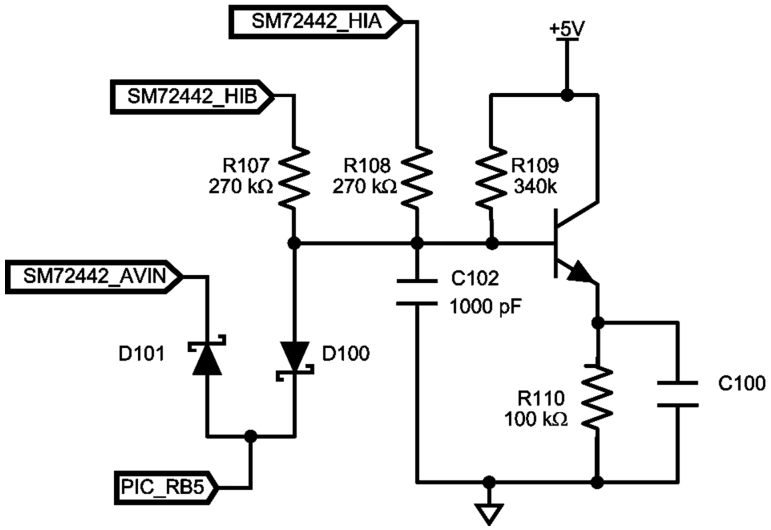

Figure 9. Start-Up Boost Circuitry

As long as the start-up circuit is activated, the duty cycle will increase every 1ms up to its maximum value. However, the duty cycle will still be limited by the SM72442's internal output voltage limiter.

The circuit is turned on when the anode of D101 and the cathode of D100 are kept at 5V. It is disabled when that node is set at 0V.

The circuit should be disabled 5ms after current begins to flow into the battery to allow proper MPPT operation.

If the current drops to 0 for any reason (no light, reset, and so on) the start-up circuit can be re-engaged according to the timing diagram in Figure 10.

This circuit operates by sensing the average value of the gate voltage on the main buck switch (Q1) and main boost switch (Q4). This value is fed back to the input current sense of the SM72442. At the same time, a constant 4.4V is set at the input voltage sense pin of the SM72442. This results in the SM72442 measuring a virtual power that increases each time the duty cycle is increased and decreases each time the duty cycle is decreased. The SM72442 will track this virtual power and increase the duty cycle of the converter continuously. When this circuit is de-activated, the real input voltage and current appear at the sensing pins of the SM72442 chip which will then perform regular MPPT operation.

Copyright © 2010–2013, Texas Instruments Incorporated

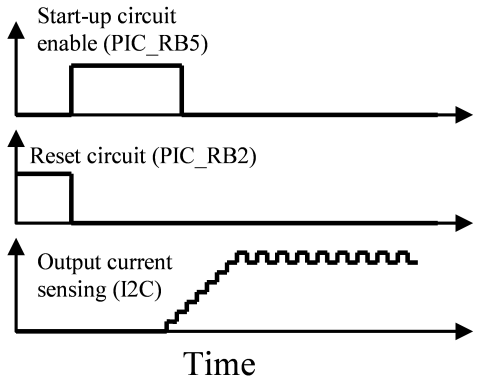

Figure 10. Start-up Circuit Timing Diagram

Figure 11 shows the expected waveform if the panel voltage is less than the battery voltage. The panel Vmp for this example is 12V @ 3A and the battery voltage is at 25V. Figure 12 showcases the magnified version of the battery current shown in Figure 11.

NOTE: To highlight the boosting capability of the system and start-up circuit, the board has been re-configured to run with a 24V battery for the experiments shown in Figure 11 and Figure 12.

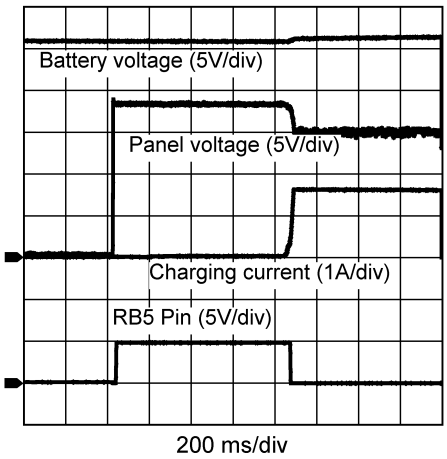

Figure 11. Start-up $V_{Panel} < V_{Batt}$

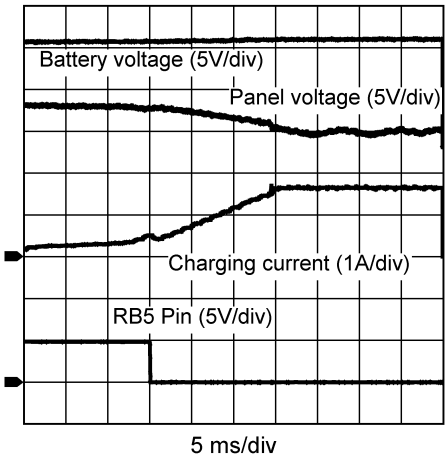

Figure 12. Start-up Detail of Battery Current

9 Output FET Disabling

Q9 keep the topside output FET Q2 from turning on. The power will flow through the parallel diode D7 instead. This prevents the battery from discharging into the PV panels. Q2 can be disabled using the microcontroller or a comparator (U12A) connected to the output current sensing: when current drops below the threshold value, Q2 is disabled. The threshold is set to 1A by default.

Copyright © 2010–2013, Texas Instruments Incorporated

10 Output Current Regulation

Current regulation is enforced by a comparator (U11A). The current setting can be switched from a low current limit to a high current limit with a bit set by the microcontroller. When microcontroller pin RC5 (pin number 16) is set to high impedance, the high current limit is set. When pin RC5 is set to 0V, the low current limit is set.

In this design, the high current limit is set to 9A and the low current limit to 0.5A.

11 Voltage Regulation

Voltage regulation with the SM72442 is performed internally. The initial output voltage setting is set through pin A0 (0-5V). The output voltage set point can then be changed through the I2C communication interface by setting the register 0x03 bits 20:29 to the required voltage set point and bit 46 to 1.

Figure 13 shows the system performing voltage regulation on the battery at 13.5V.

In addition to the voltage regulation, a comparator (U11B) will reset the SM72442 and cause the DC/DC converter to shutdown if the output voltage increases beyond the values set by R71 and R72. When the negative input of the comparator reaches over 5V, the SM72442 controller will be reset. The default value corresponds to 14.6V battery voltage.

$$V_{setpoint} = \frac{Reg3[29:20]}{1024} \times VDDA \times \frac{R_{51} + R_{52} + R_{53}}{R_{53}} \quad (1)$$

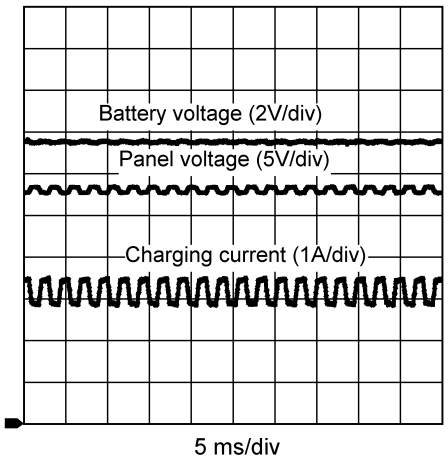

Figure 13. Charging Waveforms During Float

Copyright © 2010–2013, Texas Instruments Incorporated

12 MPPT

The SM72442 chip will perform the MPPT function using an implementation of the Perturb and Observe algorithm method. The MPPT algorithm will extract maximum power from the solar panel and deliver it to the battery regardless of the panel's characteristics. Figure 14 and Figure 15 show the effect on the panel voltage as the MPPT algorithm maintains constant power at the panel regardless of the voltage on the battery.

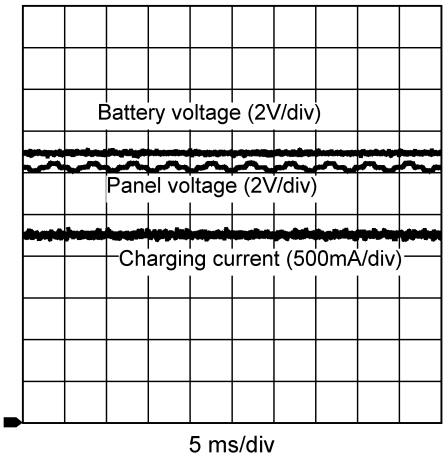

Figure 14. Battery Charging with $V_{Panel} < V_{Battery}$ (Boost)

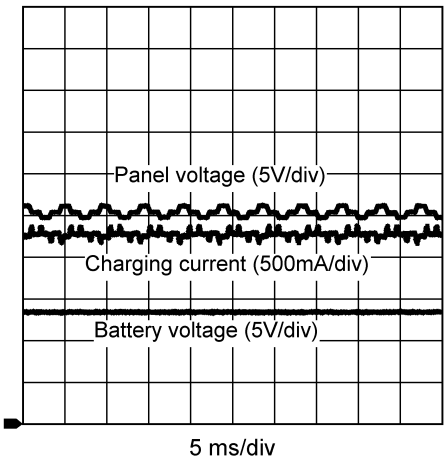

Figure 15. Battery Charging with $V_{Panel} > V_{Battery}$ (Buck)

Copyright © 2010–2013, Texas Instruments Incorporated

13 Microcontroller Functions

The charge profile is implemented in the current design using a PIC16F722 microcontroller.

13.1 Normal Operation

The flowchart in Figure 16 details the operation of the microcontroller needed to achieve the desired charging pattern.

Modification to this flowchart can easily be done and programmed to include:

- Modified threshold depending on temperature (if battery temperature information available).
- Timer to maintain high voltage threshold for a certain time before switching to floating charge to maximize energy stored in the battery.
- Pulse charging during the float charge period.

The microcontroller is programmed using a 10 pin CLE-105 connector (J5). The connections are:

- 1: NC (Not Connected)
- 2: PGD/ICSPDAT
- 3: GND
- 4: PGC/ICSPCLK
- 5: NC
- 6: GND
- 7: +5Vdc
- 8: MCLR!
- 9: GND
- 10: NC

Refer to the Microchip website for proper programming/debugging of the PIC16F family microcontrollers.

13.2 Start-Up Operation

At start-up, the microcontroller needs to assess the PV and battery voltage to verify proper connection and values.

If the values are within the specified range (correct panel and battery voltage), the microcontroller enables the charge by releasing the RESET line of the SM72442 chip. If needed, the start-up circuit is turned on by setting RB5 to ‘1’ (5V) (If the microcontroller used in the application is running below 5V, a level shifting circuit will be necessary).

Once current begins to flow in the battery the start-up circuit can be released.

While the start-up circuit is enabled, the panel current and voltage are not available through I2C. The corresponding registers can be read but will not contain the correct values.

13.3 Safety Feature

The microcontroller is programmed by default to stop charging the battery if the output voltage is above 14.5V or below 8V.

Copyright © 2010–2013, Texas Instruments Incorporated

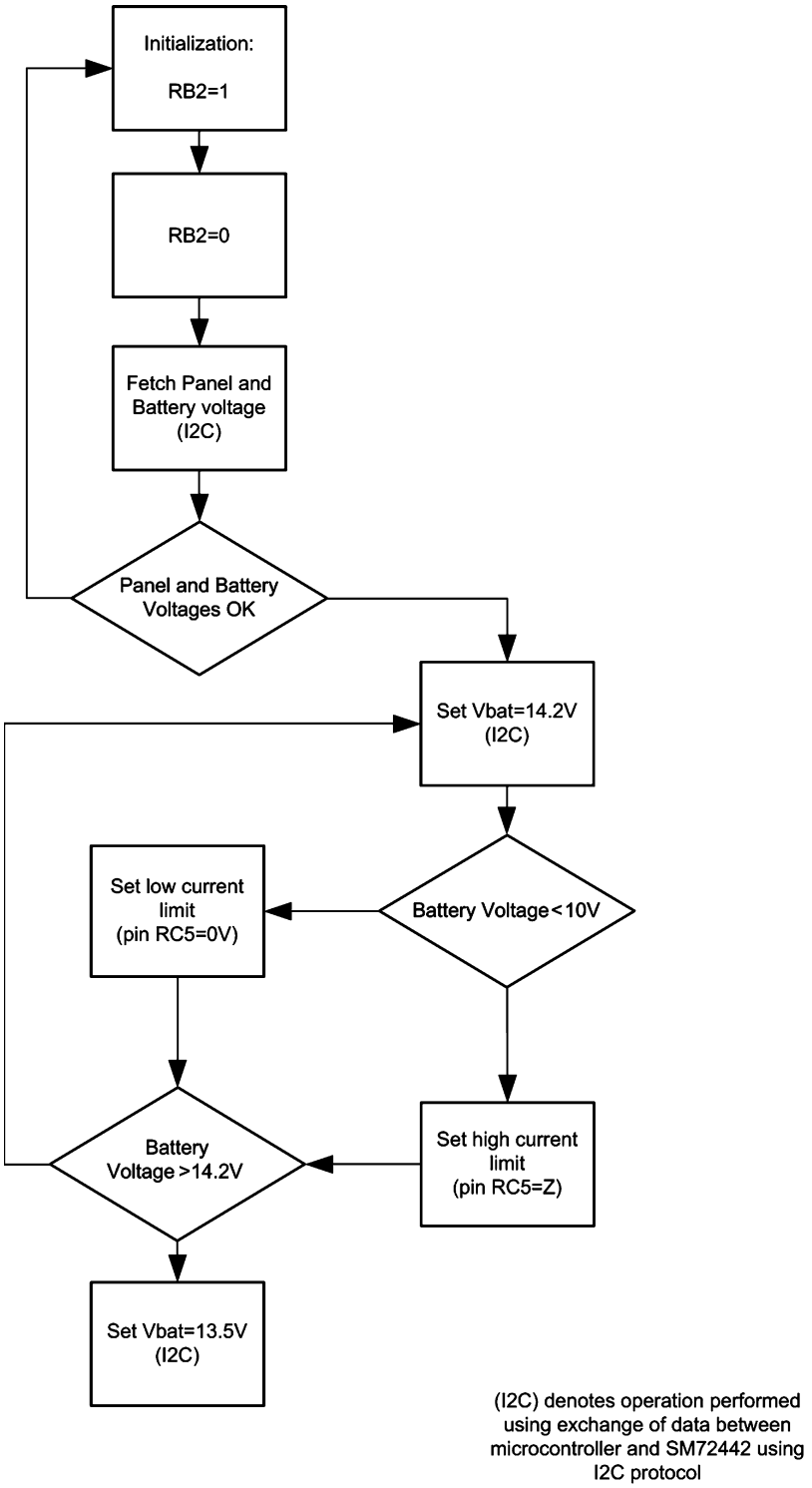

Figure 16. Basic Operational Flowchart

Copyright © 2010–2013, Texas Instruments Incorporated

14 Microcontroller Program Code

The flowchart in Figure 17 is representative of the code programmed inside the microcontroller.

The check_lead_acid function issues a value depending on the state of the battery as detected by the voltage. The main function uses this value to issue the proper action. The other functions in the program are essentially I2C driver functions and low level port setup functions.

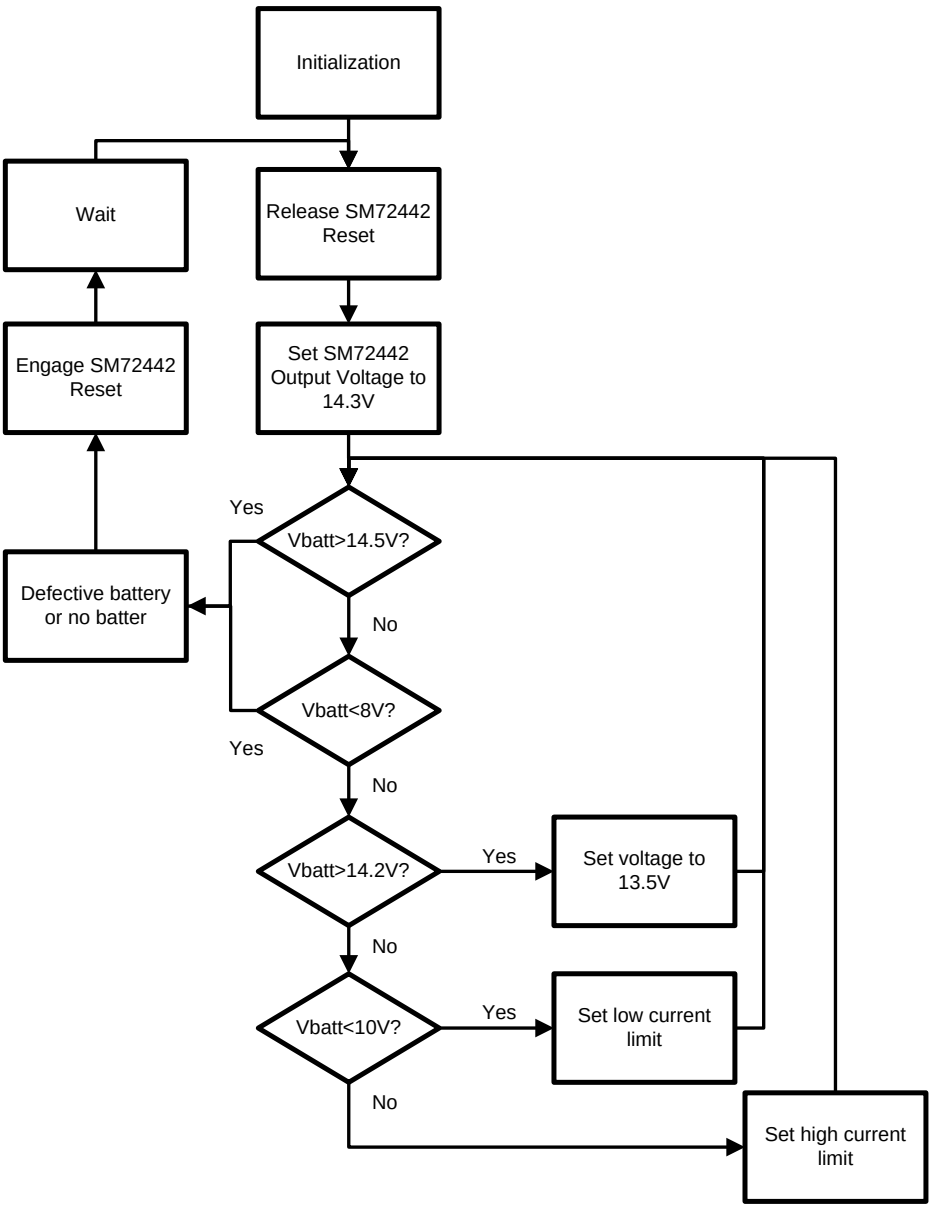

Figure 17. Microcontroller Code Flowchart

Copyright © 2010–2013, Texas Instruments Incorporated

14.1 Function: check_lead_acid()

This function senses the battery voltage through the microcontroller's A/D converter. The A/D conversion is needed because the current limiting circuit in hardware acts on the voltage sensing line of the SM72442. Therefore, when the system is running in high current mode, the voltage sensed by the SM72442 is not the battery voltage. If the current limitation is not necessary, such as panels with limited power capabilities, the voltage used by the check_lead_acid() function could be changed to the value recovered from the SM72442 through I2C instead of using the microcontroller's ADC.

This function verifies the state of the battery by sensing its voltage and returns an 8 bit number related to the state of the battery:

- 0: No change
- 1: Battery reached the full State Of Charge voltage
- 2: Battery voltage is low
- 3: Battery voltage is too low or battery damaged/disconnected
- 4: Battery voltage is above the acceptable value: battery damaged or disconnected
- 5: Battery voltage has reached above 13.6V. This is usually due to the lower limit on the duty cycle of the buck converter. When the battery stays in floating charge state for too long, the converter will keep pumping a minimum current into the battery which could result in an increase of the battery voltage beyond the desired floating charge voltage range.
- 6: Battery voltage has returned to an acceptable value

States 5 and 6 correspond to the state of charge of the battery after it has reached it's floating charge state value of 13.5V. When "5" is returned by this function, the program will completely cut the charge into the battery (by issuing a reset to the SM72442 via PORTB of the microcontroller). When "6" is returned by this function, the program will re-enable the floating charge into the battery by releasing the reset on the SM72442.

14.2 Function: Main()

The "Main" function calls the" Init()" function, which simply initializes the variables and the registers. The program then enters an infinite while-loop in which the values of the sensed voltages and current are recovered from the SM72442 through I2C. The function "check_lead_acid()" is called and returns a value based on the voltage of the battery. The "Main" function uses this value to modify the behavior of the system. The following lists the values returned from the "check_lead_acid()" function the corresponding action the "Main" function will take:

- 1 (fully charged battery): The floating charge voltage setpoint will be sent to SM72442 through I2C
- 2 (heavily discharged battery): Trickle charge will be applied
- 3 (battery voltage too low): System shuts down by keeping the SM72442 in reset mode (bit RB2 set)
- 4 (battery voltage too high): System shuts down by keeping the SM72442 in reset mode (bit RB2 set)
- 5 (battery voltage slightly high in floating charge): System shuts down by keeping the SM72442 in reset mode (bit RB2 set) and hysteresis flag set
- 6 (battery voltage dropped below 13V after hysteresis flag set): Re-enable SM72442, hysteresis flag reset

The Main function also resets the watchdog timer once every iteration of the while-loop.

14.3 Function: get_i2c_data

This function reads the sampled voltage of pin AIIN(19), AVIN(15), AIOUT(21), and AVOUT(17) of the SM72442. The data is fetched through the I2C channel. The function updates the global variable "outval" which is an array of unsigned 16 bit integers. The data only occupies 10bits of each integer (full scale=1023).

- outval[0] = input current
- outval[1] = input voltage
- outval[2] = output current
- outval[3] = output voltage

Copyright © 2010–2013, Texas Instruments Incorporated

14.4 Function: send_i2c_command(char number)

Sends an I2C communication string. Each byte sent is stored in the global array “i2c_buffer”. The argument “number” indicates how many bytes from the buffer will be sent (starting with i2c_buffer[0]). Refer to the data sheet and I2C and SM_bus standards documentation for complete protocol information. The main use of this function is to change the voltage limit settings in the SM72442.

14.5 Function: Set_Voutmax()

This will read the “voutmax” variable set in the main and sends the proper I2C command to the SM72442 to regulate that voltage.

14.6 Function: Check_low_current()

This function is called by the “Main” function and controls the start-up circuitry to force the duty cycle of the converter up if the current becomes close to 0.

Figure 18 summarizes the overall structure of the program: (arrows from the main represent calls to the functions)

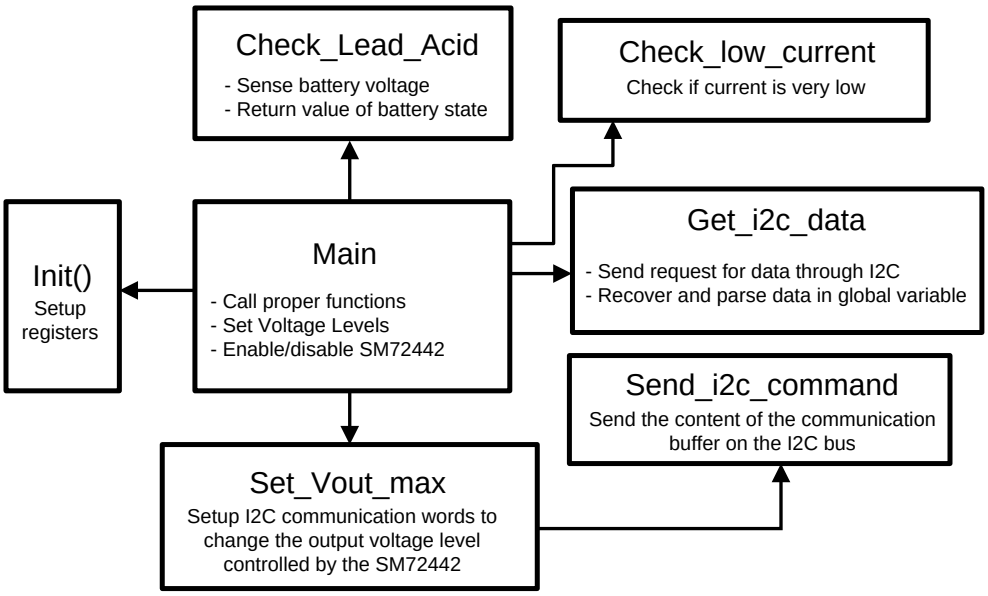

Figure 18. Microcontroller Code Block Diagram

15 Charging a Li-ion Battery

Although this evaluation board was specifically designed for charging a lead-acid battery, it can be re-configured to accommodate the Li-ion chemistry battery through a combination of hardware and software changes. In order to re-configure the board for Li-ion charging, the following steps need to be done:

1. The voltage sensing resistors R103, R104, R51, R52 and R53 and OVP resistors R71 and R72 need to be changed to the proper values. It is critical for this application that the full scale voltage range for sensing is as close as possible to the voltage of the battery to maximize the resolution of the sensed voltage. The level of the OVP circuit needs to be scaled so that it does not trigger when the battery approaches full SOC but at a voltage slightly higher.

Copyright © 2010–2013, Texas Instruments Incorporated

- R103 and R104 set the voltage at the input of the microcontroller. The voltage at the input of the microcontroller is:

$$V_{A12} = V_{BAT} \times \frac{R_{103}}{R_{103} + R_{104}} \quad (2)$$

- R103 and R104 should be chosen so that the maximum expected battery voltage creates a voltage close to 5V to maximize resolution (but less than 5V to avoid saturating the measure).
- R51, R52 and R53 are for the voltage measurement of the SM72442 and should be modified in the same way:

$$V_{AVOUT} = V_{BAT} \times \frac{R_{53}}{R_{51} + R_{52} + R_{53}} \quad (3)$$

- R21 needs to be set to zero ohm (short).
- Once the values are picked, the proper threshold needs to be programmed through I2C. The maximum level (0x3FF) is now V_{AVOUT} = 5V at the input of the SM72442.
- Finally, the overvoltage protection should be adjusted to:

$$V_{HARD_OVP} = V_{BAT} \times \frac{R_{72}}{R_{71} + R_{72}} \quad (4)$$

- The OVP level is set at V_{HARD_OVP} = 5v.

2. The proper voltage setpoints and charging curve need to be programmed in the microcontroller. The initial voltage limit is set by R28 and R38. Voltage limit setpoint is AVOUT = A0. Once overridden through I2C, the voltage at A0 is not used anymore. Hence, there is the option of setting the value through resistors R28 and R38 or by programming it from the microcontroller into SM72442 through I2C each time the SM72442 is reset/powered.
3. Proper current limits also need to be set if required by the battery model. The current limit value is set when the voltage at pin 3 of U11A equals the voltage at pin 2. Hence, R111 and R112 will need to be adjusted accordingly.
4. The software needs to be changed to follow the Li-ion charge control profile: battery voltage is set either by hardware as stated above, which requires no action from the software, or it is set from the microcontroller through the I2C interface similar to the Lead Acid battery.
5. Finally, the software needs to include the full State-Of-Charge cut-off: When the battery reaches its full voltage and current has dropped below 500mA (can vary depending on battery), charge is cut-off and the battery is considered fully charged (no trickle charge of Li-ion batteries should be done). It is important to remember that current can drop below 500mA during the charge when solar power becomes unavailable (low light intensity). Therefore the charge cut-off needs to be programmed to occur only when the battery voltage is at the limit AND current has dropped below the required threshold.

Figure 19 shows the typical charging profile for a Li-ion battery.

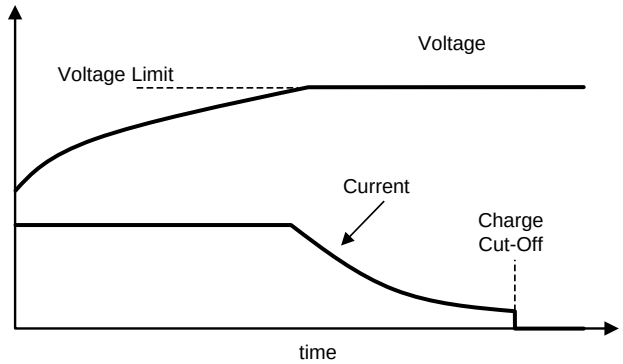

Figure 19. Li-ion Charge Profile

Copyright © 2010–2013, Texas Instruments Incorporated

16 Bill of Materials

	Designator	Description	Manufacturer	Part Number	Qty
1	U17	Flash-Based, 8-Bit CMOS Microcontroller, 2K (x14-Bit words) Program Memory, 128 Bytes Data Memory, 25 I/O pins, 28-Pin SOIC, Standard VDD Range, Extended Temperature	Microchip Technology	PIC16F722-E/SS or PIC16F722-I/SS	1
2	C1, C2, C3, C4, C5, C6, C7, C8, C9, C10, C11, C12, C13, C14, C16, C20, C25, C27, C28, C30, C36, C42, C44, C45, C47, C48, C53, C55, C57, C67, C70, C72	Ceramic, X7R, 50V, 10%	MuRata	C3225X7R1H225k/2.50	32
3	C15, C17, C22, C26, C32, C49, C50, C51, C52, C65	Ceramic, X7R, 25V, 10%	MuRata	GRM188R71E104KA01D	10
4	C18, C19	Ceramic, C0G/NP0, 100V, 5%	AVX	08051A471JAT2A	2
5	C21	Ceramic, X7R, 100V, 10%	Taiyo Yuden	HMK212B7104KG-T	1
6	C23, C33, C34, C38	Ceramic, X7R, 16V, 10%	Taiyo Yuden	EMK212B7225KG-T	4
7	C24	Ceramic, X7R, 50V, 10%	MuRata	GRM188R71H331KA01D	1
8	C29, C37, C39, C59	Ceramic, X7R, 100V, 20%	AVX	06031C103MAT2A	4
9	C31, C35, C40	Ceramic, X7R, 16V, 10%	Taiyo Yuden	EMK212B7105KG-T	3
10	C46, C54	Ceramic, X7R, 16V, 10%	AVX	0805YC474KAT2A	2
11	C58, C60, C61, C62, C66, C69	Ceramic, C0G/NP0, 100V, 5%	TDK	C1608C0G2A102J	6
12	C73	Ceramic, C0G/NP0, 50V, 5%	TDK	C1608C0G1H151J	1
13	C88	CAP, CERM, 0.1uF, 25V, +/-5%, X7R, 0603	AVX	06033C104JAT2A	1
14	C100, C102	CAP, CERM, 1000pF, 100V, +/-10%, X8R, 0603	TDK	C1608X8R2A102K	2
15	C101	CAP, CERM, 0.1uF, 16V, +/-5%, X7R, 0603	AVX	0603YC104JAT2A	1
16	D2, D7, D9, D12, D13, D14, D15	Vr = 100V, Io = 1A, Vf = 0.77V	Diodes Inc.	DFLS1100-7	7
17	D3, D4, D5, D6	Vr = 30V, Io = 1A, Vf = 0.47V	ON Semiconductor	MBR130T1G	4
18	D100, D101	Vr = 30V, Io = 0.2A, Vf = 0.65V	Diodes Inc.	BAT54-7-F	2
20	J1, J2, J3, J4	PC Quick-Fit 0.250 Tab	Keystone	4908	4
21	J5	CONN RCPT 10POS .8MM DL GOLD SMD	SAMTEC	CLE-105-01-G-DV	1
22	J11, J12, J13, J14	200 mill pad with 165 mill hole	NONE	NONE	4
23	L4	Shielded Drum Core, 0.56A, 0.907 Ohm	Coiltronics	DR74-221-R	1
24	P1	Header, TH, 100mil, 1x2, Tin plated, 230 mil above insulator	Samtec Inc.	TSW-102-07-T-S	1
25	Q1, Q2, Q3, Q4	40A, 53nC, rDS(on) @ 4.5V = 0.018 Ohm	International Rectifier	IRF3205ZPBF	4
26	Q7, Q8, Q9	0.26A, 0.81nC, rDS(on) @ 4.5V = 3	ON Semiconductor	2N7002ET1G	3
27	Q11	Transistor, NPN, 40V, 0.15A, SOT-23	Diodes Inc.	MMBT4401-7-F	1
28	Q200	MOSFET, P-CH, -50V, -130A, SOT-323	Diodes Inc.	BSS84W-7-F	1
29	R1, R10	1%, 2W	Stackpole	CSNL 2 0.004 1% R	2
30	R2, R54	1%, 0.125W	Vishay-Dale	CRCW0805178kFKEA	2

Copyright © 2010–2013, Texas Instruments Incorporated

	Designator	Description	Manufacturer	Part Number	Qty
31	R3, R4, R22, R23, R30, R36, R42, R43, R45, R72, R100, R101, R102, R105, R106, R111, R119, R120, R121, R300, R400	1%, 0.1W	Vishay-Dale	CRCW060310k0FKEA	21
32	R5	1%, 0.1W	Vishay-Dale	CRCW0603124kFKEA	1
33	R6	1%, 0.125W	Vishay-Dale	CRCW08051R00FNEA	1
34	R7, R13	1%, 0.25W	Vishay-Dale	CRCW120619k6FKEA	2
35	R8, R12, R24, R34	1%, 0.1W	Vishay-Dale	CRCW0603499RFKEA	4
36	R9	1%, 0.1W	Vishay-Dale	CRCW060312k4FKEA	1
37	R11, R14	1%, 1W	Vishay-Dale	CRCW121810R0FKEK	2
38	R15	1%, 0.1W	Vishay-Dale	CRCW06034k22FKEA	1
39	R17	1%, 0.1W	Panasonic	ERJ-3RQFR33V	1
40	R18, R19	RES, 10 ohm, 5%, 0.125W, 0805	Vishay-Dale	CRCW080510R0JNEA	2
41	R20, R29, R31, R47, R48	1%, 0.1W, RES, 2.00k ohm, 1%, 0.1W, 0603	Vishay-Dale	CRCW06032k00FKEA	5
42	R21	1%, 0.1W	Vishay-Dale	CRCW060349R9FKEA	1
43	R25, R35, R37, R44	5%, 0.1W	Vishay-Dale	CRCW06030000Z0EA	4
44	R26, R56, R87, R116	1%, 0.1W	Vishay-Dale	CRCW060360k4FKEA	4
45	R71, R73	1%, 0.1W, RES, 19.1k ohm, 1%, 0.1W, 0603	Vishay-Dale	CRCW060319k1FKEA	3
46	R32, R33	RES, 4.99 ohm, 1%, 0.125W, 0805	Vishay-Dale	CRCW08054R99FNEA	2
47	R38	1%, 0.1W	Vishay-Dale	CRCW060331k6FKEA	1
48	R39	RES, 1.00Meg ohm, 1%, 0.1W, 0603	Vishay-Dale	CRCW06031M00FKEA	1
49	R40	1%, 0.1W	Vishay-Dale	CRCW0603150kFKEA	1
50	R41	RES, 45.3k ohm, 1%, 0.1W, 0603	Vishay-Dale	CRCW060345K3FKEA	1
51	R51, R52	RES, 12.4k ohm, 1%, 0.25W, 1206	Vishay-Dale	CRCW120612K4FKEA	2
52	R53, R103	RES, 4.02k ohm, 1%, 0.1W, 0603	Vishay-Dale	CRCW06034K02FKEA	2
54	R104	RES, 24.9k ohm, 1%, 0.1W, 0603	Vishay-Dale	CRCW060324K9FKEA	1
55	R107, R108	RES, 270k ohm, 1%, 0.1W, 0603	Yageo America	RC0603FR-07270KL	2
56	R109	RES, 340k ohm, 1%, 0.1W, 0603	Yageo America	RC0603FR-07340KL	1
57	R110, R122	RES, 100k ohm, 1%, 0.1W, 0603	Yageo America	RC0603FR-07100KL	2
58	R112	RES, 511k ohm, 1%, 0.1W, 0603	Vishay-Dale	CRCW0603511KFKEA	1
59	R113, R117	RES, 22k ohm, 5%, 0.1W, 0603	Vishay-Dale	CRCW060322K0JNEA	2
61	R118	RES, 105k ohm, 1%, 0.1W, 0603	Vishay-Dale	CRCW0603105KFKEA	1
62	R200	RES, 604 ohm, 1%, 0.1W, 0603	Vishay-Dale	CRCW0603604RFKEA	1
63	R500, R600	RES, 100k ohm, 1%, 0.1W, 0603	Vishay-Dale	CRCW0603100KFKEA	2
64	TP1, TP2	Test Point, SMT, Miniature	Keystone Electronics	5015	2
65	U1	150 mA, 100V Step-Down Switching Regulator	Texas Instruments	SM72485	1
66	U2, U3	1.6V, LLP-6 Factory Preset Temperature Switch and Temperature Sensor	Texas Instruments	SM72480	2
67	U5	Series of Adjustable Micropower Voltage Regulators	Texas Instruments	SM72238	1
68	U7	Driver	Texas Instruments	SM72295	1
69	U8	Digital Controller	Texas Instruments	SM72442	1
70	U9	5-Pin Microprocessor Reset Circuits	Texas Instruments	SM72240	1
71	U11, U12	Dual Micro-Power Rail-to-Rail Input CMOS Comparator with Open Drain Output	Texas Instruments	SM72375	2
72	L1	Inductor 2 uH EFD-30 core	PULSE	PA2965-203NL	1

Copyright © 2010–2013, Texas Instruments Incorporated

17 Charge Controller System Schematic

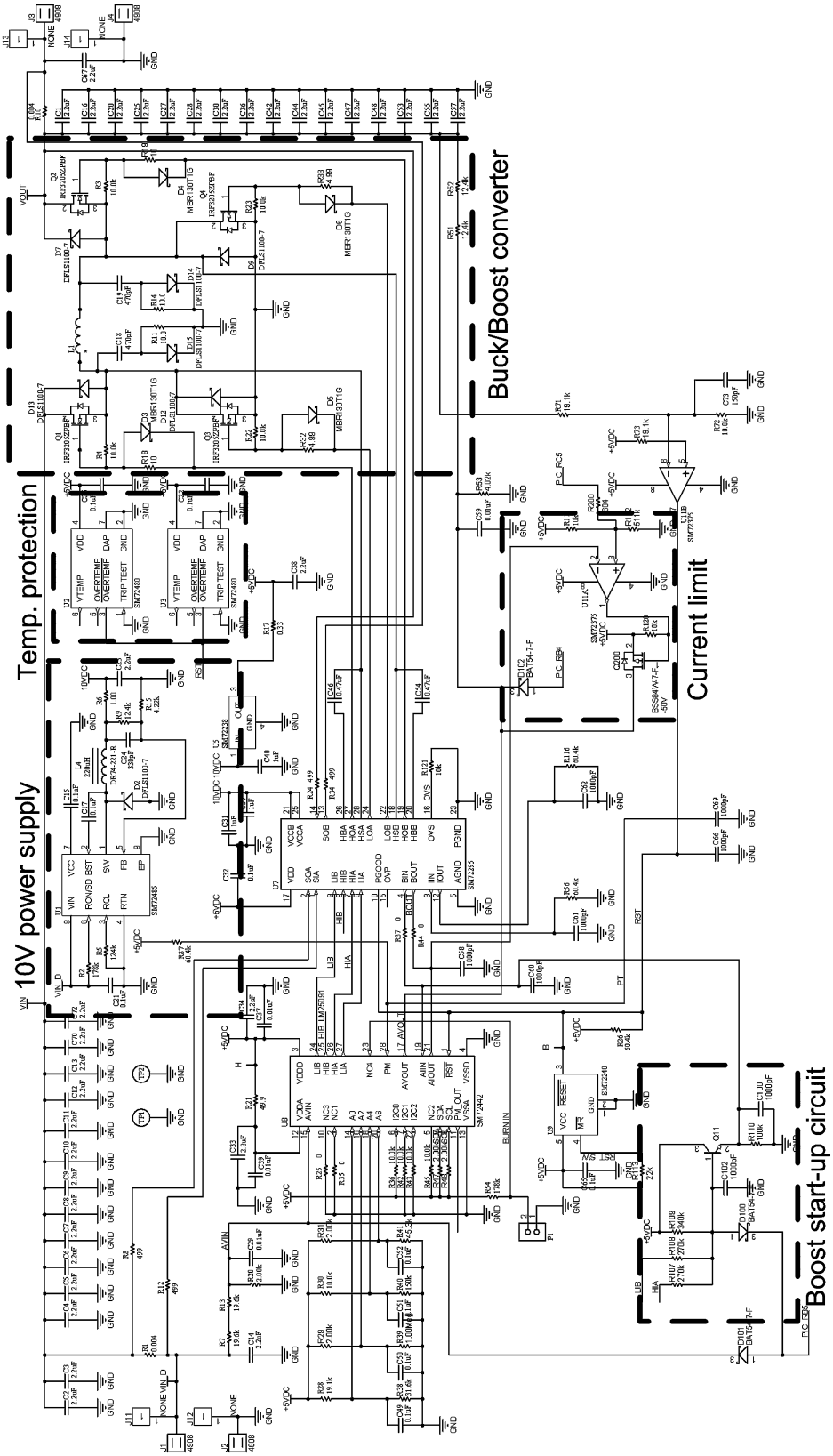

Figure 20. Charge Controller System Schematic, Part 1

Copyright © 2010–2013, Texas Instruments Incorporated

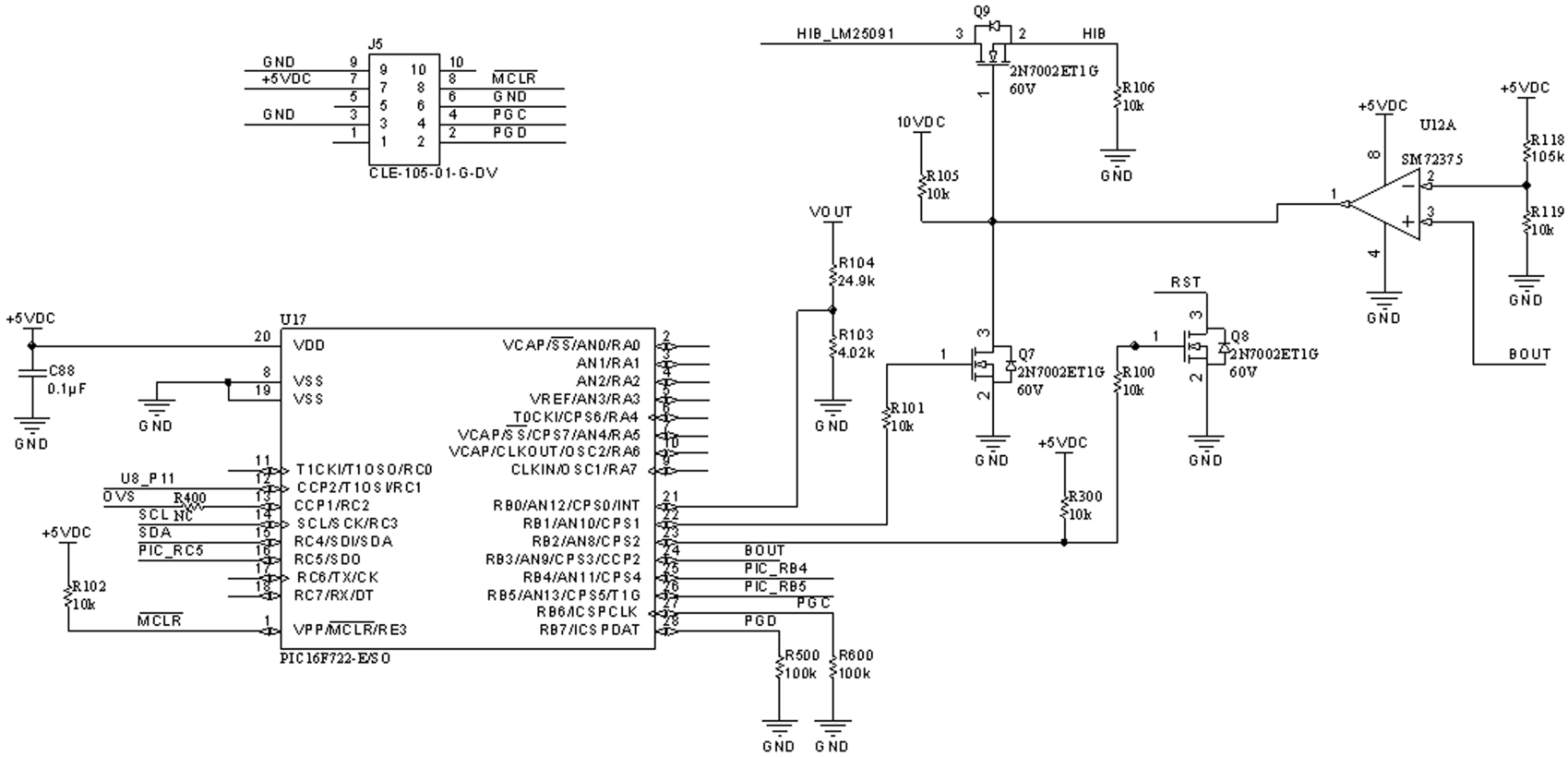

Figure 21. Charge Controller System Schematic, Part 2

Copyright © 2010–2013, Texas Instruments Incorporated

IMPORTANT NOTICE

Texas Instruments Incorporated and its subsidiaries (TI) reserve the right to make corrections, enhancements, improvements and other changes to its semiconductor products and services per JESD46, latest issue, and to discontinue any product or service per JESD48, latest issue. Buyers should obtain the latest relevant information before placing orders and should verify that such information is current and complete. All semiconductor products (also referred to herein as “components”) are sold subject to TI’s terms and conditions of sale supplied at the time of order acknowledgment.

TI warrants performance of its components to the specifications applicable at the time of sale, in accordance with the warranty in TI’s terms and conditions of sale of semiconductor products. Testing and other quality control techniques are used to the extent TI deems necessary to support this warranty. Except where mandated by applicable law, testing of all parameters of each component is not necessarily performed.

TI assumes no liability for applications assistance or the design of Buyers’ products. Buyers are responsible for their products and applications using TI components. To minimize the risks associated with Buyers’ products and applications, Buyers should provide adequate design and operating safeguards.

TI does not warrant or represent that any license, either express or implied, is granted under any patent right, copyright, mask work right, or other intellectual property right relating to any combination, machine, or process in which TI components or services are used. Information published by TI regarding third-party products or services does not constitute a license to use such products or services or a warranty or endorsement thereof. Use of such information may require a license from a third party under the patents or other intellectual property of the third party, or a license from TI under the patents or other intellectual property of TI.

Reproduction of significant portions of TI information in TI data books or data sheets is permissible only if reproduction is without alteration and is accompanied by all associated warranties, conditions, limitations, and notices. TI is not responsible or liable for such altered documentation. Information of third parties may be subject to additional restrictions.

Resale of TI components or services with statements different from or beyond the parameters stated by TI for that component or service voids all express and any implied warranties for the associated TI component or service and is an unfair and deceptive business practice. TI is not responsible or liable for any such statements.

Buyer acknowledges and agrees that it is solely responsible for compliance with all legal, regulatory and safety-related requirements concerning its products, and any use of TI components in its applications, notwithstanding any applications-related information or support that may be provided by TI. Buyer represents and agrees that it has all the necessary expertise to create and implement safeguards which anticipate dangerous consequences of failures, monitor failures and their consequences, lessen the likelihood of failures that might cause harm and take appropriate remedial actions. Buyer will fully indemnify TI and its representatives against any damages arising out of the use of any TI components in safety-critical applications.

In some cases, TI components may be promoted specifically to facilitate safety-related applications. With such components, TI’s goal is to help enable customers to design and create their own end-product solutions that meet applicable functional safety standards and requirements. Nonetheless, such components are subject to these terms.

No TI components are authorized for use in FDA Class III (or similar life-critical medical equipment) unless authorized officers of the parties have executed a special agreement specifically governing such use.

Only those TI components which TI has specifically designated as military grade or “enhanced plastic” are designed and intended for use in military/aerospace applications or environments. Buyer acknowledges and agrees that any military or aerospace use of TI components which have ***not*** been so designated is solely at the Buyer's risk, and that Buyer is solely responsible for compliance with all legal and regulatory requirements in connection with such use.

TI has specifically designated certain components as meeting ISO/TS16949 requirements, mainly for automotive use. In any case of use of non-designated products, TI will not be responsible for any failure to meet ISO/TS16949.

Products		**Applications**	
Audio	www.ti.com/audio	Automotive and Transportation	www.ti.com/automotive
Amplifiers	amplifier.ti.com	Communications and Telecom	www.ti.com/communications
Data Converters	dataconverter.ti.com	Computers and Peripherals	www.ti.com/computers
DLP® Products	www.dlp.com	Consumer Electronics	www.ti.com/consumer-apps
DSP	dsp.ti.com	Energy and Lighting	www.ti.com/energy
Clocks and Timers	www.ti.com/clocks	Industrial	www.ti.com/industrial
Interface	interface.ti.com	Medical	www.ti.com/medical
Logic	logic.ti.com	Security	www.ti.com/security
Power Mgmt	power.ti.com	Space, Avionics and Defense	www.ti.com/space-avionics-defense
Microcontrollers	microcontroller.ti.com	Video and Imaging	www.ti.com/video
RFID	www.ti-rfid.com		
OMAP Applications Processors	www.ti.com/omap	**TI E2E Community**	e2e.ti.com
Wireless Connectivity	www.ti.com/wirelessconnectivity		

Mailing Address: Texas Instruments, Post Office Box 655303, Dallas, Texas 75265
Copyright © 2013, Texas Instruments Incorporated