SANYOU RELAYS
Relays for advanced technology

Miniature High Power Relay

SLC-Series



Features

- Miniature relay with high switching capability：30A.
- Contact form： Form A, Form B or 1Form C.
- Special type of 4000VAC dielectric strength and 6000V surge voltage (1.2/50uS) between coil and contact available.
- Protection quick connect terminal type available.
- Satisfy IEC60335-1product is available.

Safety Approval

UL，C-UL File No.：E190598
TUV File No.： R50143450
CQC File No.：CQC02001002109
VDE File No.： 40036707

Contact Capacity

Model	SLC -DM	SLC -DB	SLC -D
Nominal switching capacity (res. load)	30A 250VAC	15A 250VAC	20A/10A 250VAC
Max. switching current	30A	20A	20A
Max. switching voltage	250VAC	250VAC	250VAC
Max. switching power	7,500VA	5,000VA	5,000VA

Characteristic Data

Contact material	Silver alloy	
Initial contact resistance (at 6VDC 1A)	50mΩ Max.(1A 6VDC)	
Operate time (at nominal volt.)	15msec. Max.(no diode)	
Release time (at nominal volt.)	10msec. Max.(no diode)	
Initial insulation resistance	100MΩ Min.(DC500V)	
Initial dielectric strength	Between open contacts： AC1,500V，50/60Hz 1min.	
	Between coil and contact： AC2,500V，50/60Hz 1min.(AC4KV available)	
Vibration resistance	Functional	10～55Hz at double amplitude of 1.5 mm
	Destructive	10～55Hz at double amplitude of 1.5 mm
Shock resistance	Functional	10G Min.
	Destructive	100G Min.
Endurance (operations)	Mechanical (at 10,800 ops./h)	10,000,000 cycles(at room temperature)
	Electrical (at 360 ops./h)	100,000 cycles(at room temperature)
Ambient temperature	-40℃～+105℃ (no condensation)	
Unit weight	Approx.31.0g	

Coil Data(at 20℃)

Nominal voltage (VDC)	Nominal operating current 10% (mA)	Coil resistance 10% (Ω)	Max. allowable voltage	Pick-up voltage (Max.)	Drop-out voltage (Min.)	Nominal operating power
5	180.00	27	130 % of nominal voltage	75% of nominal voltage	5 % of nominal voltage	0.90W
6	150.00	40				
9	100.00	90				
12	75.00	160				
15	60.00	250				
18	50.00	360				
24	37.50	640				
48	18.75	2,560				
110	8.20	13,400				

Safety Approval Ratings

(Note:More detail of approval ratings,please refer to the safety certification)

Approval	CQC	TUV	UL/CUL	VDE
File No.	CQC02001002109	R50143450	E190598	40036707
Approved ratings	Form A : 30A 250VAC Form B : 15A 250VAC Form C : 20A/10A 250VAC	Form A : 30A 240VAC Making: 80A 250VAC(300ms) Breaking:20A 250VAC Form B : 15A 240VAC Form C : 20A/10A 240VAC	Form A: 40A 277VAC, Resistive; 15A 240VAC ; 30A 240VAC, Resistive/General Use; 1-1/2HP 240VAC;3/4 HP 120VAC; TV-8 120VAC ; 30A 120VAC, Resistive/General Use; Pilot duty: 470 VA, 240VAC; Electronic Ballast: 10A 277VAC /120VAC; Form B: 30A 120VAC, General Use; 20A 240VAC, General Use; 20A 120VAC, Resistive; 10A 240VAC, Resistive/General Use; Pilot duty: 275VA, 240VAC; Electronic Ballast: 5A, 277VAC/120VAC; 1/2HP 240VAC;1/4HP 120VAC; Form C: N.O. N.C. 30A 240/120VAC,Resistive 30A 240/120VAC,General Use 20A 240/120VAC, Resistive 20A 240VAC, Resistive 20A 240/120VAC,General Use 10A 240VAC, Resistive 10A 240VAC, Resistive 1-1/2HP 240VAC 1/2HP 240VAC 3/4HP 125/120VAC 1/4HP 125/120VAC TV-8 120VAC TV-3 120VAC 20A 240VAC, General Use 10A 240VAC, General Use Pilot Duty: 470VA 240VAC Pilot Duty: 275VA 240VAC Electronic Ballast: Electronic Ballast: 10A 277VAC/120VAC 5A 277VAC/120VAC	30A 250VAC,NO 20A 250VAC,CO(test NO) 10A 250VAC,CO(test NC)

(1) The above-mentioned unspecified temperature ratings, means that the ambient temperature is room temperature.

(2) Only some typical ratings are listed above. Each rating's test condition is different, so the electrical endurance will be different. If more details are required, please contact us.

(3) For sealed type testing, please open the ventilation hole of case before test.

Ordering Information

Nomenclature

SLC - S - 1 12 D M K 1 - G -P -F -XX

- -XX : Special Parameter : Nil-Standard type, Letter or number-Special requirement
- -F : Insulation System : Nil-Standard, B-Class B, F-Class F
- -P : COM Flat quick-connect terminals: Nil- Yoke and flat quick-connect terminal is one part; P-Yoke rivet flat quick-connect terminal only for SLC-K
- -G : Paraneter sign : Nil-Standard,G-High contact load,Double-layer spring,Ø5.0 Contact
- 1 : Contact Material : Nil-AgSnO2, 1-AgCdO
- K : Terminal position: Nil-COM terminal and NC/NO terminal on the same side; K-COM terminal and NC/NO terminal on the opposite side
- M : Contact Form : Nil-Form C, B-Form B, M-Form A
- D : Coil Power : D-0.90W
- 12 : Coil Voltage (VDC) : 05, 06, 09, 12, 15, 18, 24, 48, 110
- 1 : Number of Poles : 1-1 Pole
- S : Protective Construction : S-Flux proofed, SH-sealed type washable
- SLC : Type Designation : SLC

Outline Dimensions, Wiring Diagram, P.C. Board Layout (unit : mm)

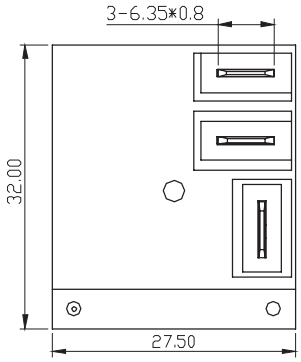

SLC

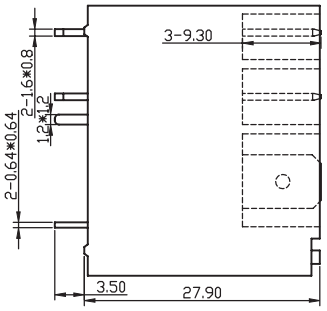

Unless otherwise specified :
If dimension < 1mm, tolerance : 0.2 mm;
If dimension 1~5mm, tolerance : 0.3 mm;
If dimension > 5mm, tolerance : 0.4 mm.
Note : 1. Extended terminal dimension is dimension before soldering.
2. Tolerance of P.C.B. Layout : 0.1 mm.

SLC-K

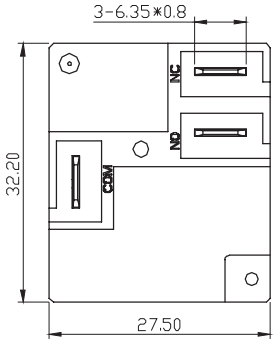

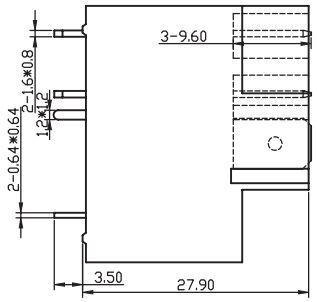

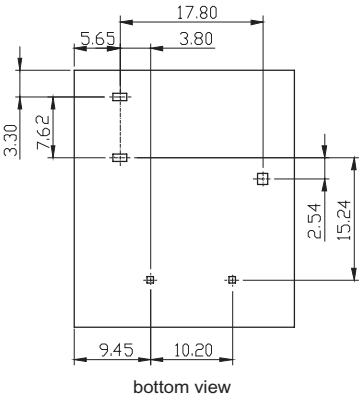

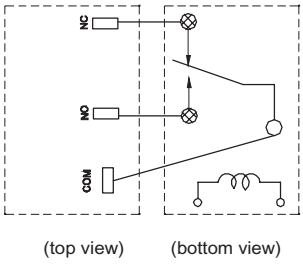

1c

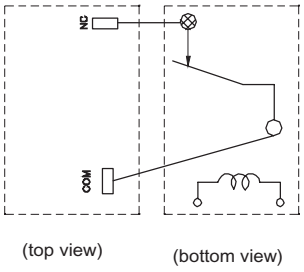

1b

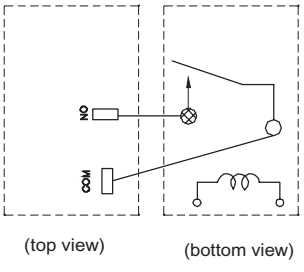

1a

SLC Wiring Diagram

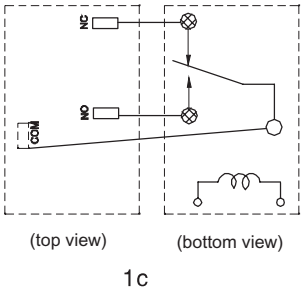

1c

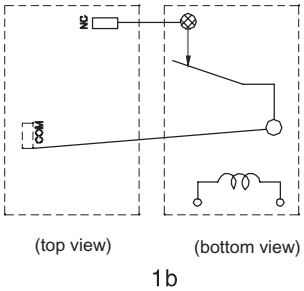

1b

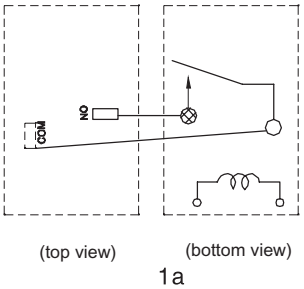

1a

SLC-KWiring Diagram

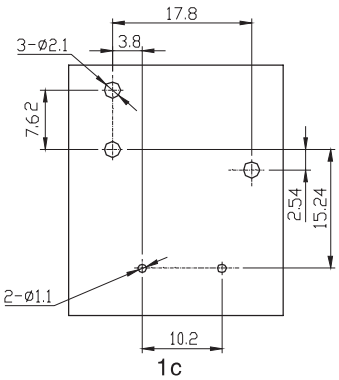

1c

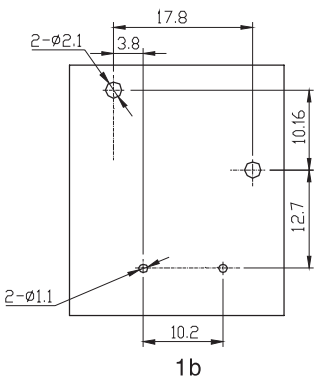

1b

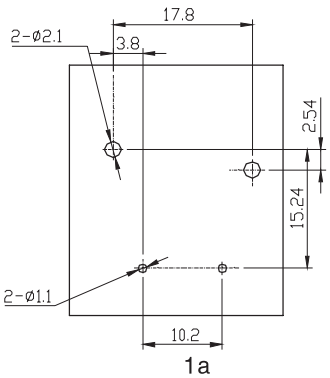

1a

P.C.B Layout (Bottom view)

Typical Applications

- Car
- Heater and ventilation equipment
- Air conditioner
- Home appliances

Characteristic Curves

Coil Temp. Rise

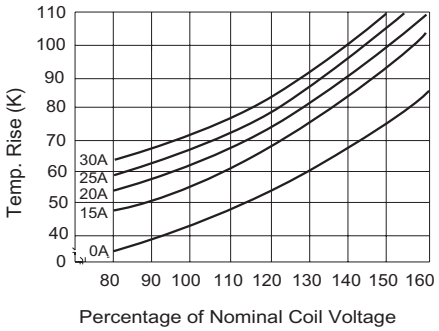

Max. Switching Power

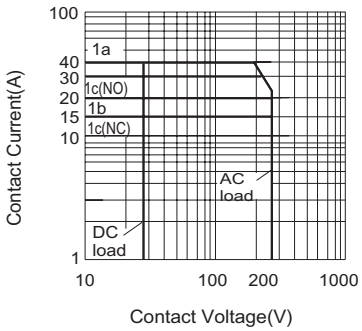

Endurance Curve

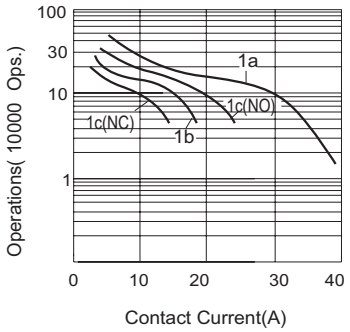

Note: If you choose the sealed type, before using, please remove the convex platform at the top of the case to ensure the normal performance of the relay after the completion of a PCB operations. they are as shown in the following diagram :

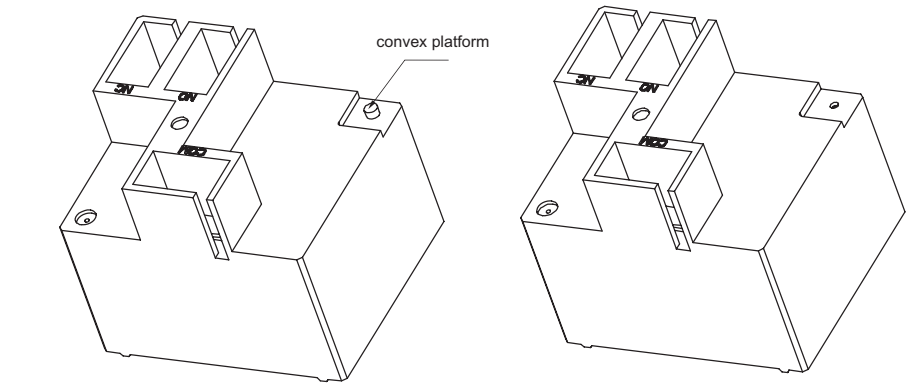

SLC-K

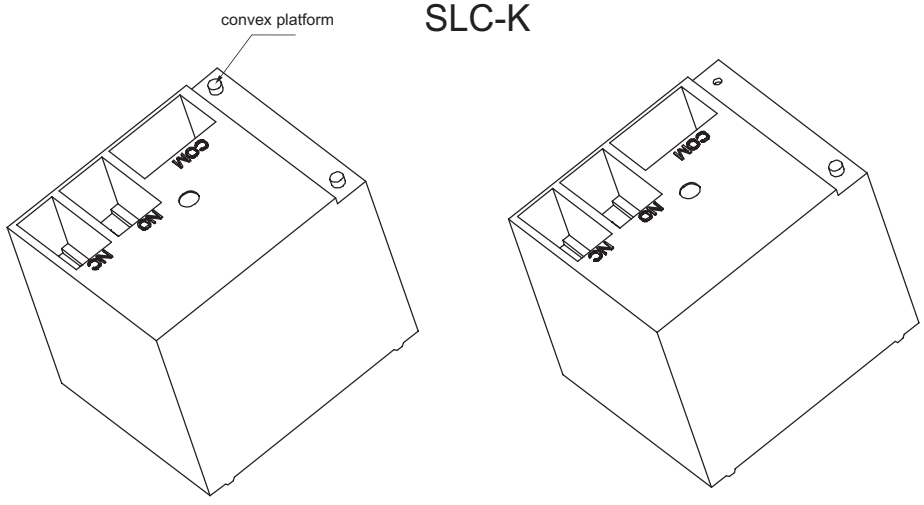

with convex platform SLC without convex platform

Disclaimer:

This datasheet is the customers' reference. All the specification are subject to change without notice.

We could not evaluate all the performance and all the parameters for every possible application.Thus the user should in a right position to choose the suitable product for their own application.For sealed relays after installation and cleaning, please open the vent hole on the case before use.If there is any query,please contact Sanyou for the technica service. However it is the user's responsibility to determine which product should be used only.

Sanyou Corporation Limited ,All rights of Sanyou to reserved