SL3 ICS 10

UCODE EPC G2

Rev. 3.0 — 20 September 2006 **Product short data sheet**
129430

1. General description

The EPC global UHF Generation 2 Standard allows the commercialised provision of mass adaption of UHF EPC technology for passive smart tags and labels. Main fields of applications will be especially the supply chain management and logistics for worldwide use with especial consideration of European and US regulations to ensure that operating distances of several meters can be realized.

The UCODE EPC G2 IC is a dedicated chip for passive, intelligent tags and labels supporting the EPCglobal Class 1 Generation 2 UHF RFID standard. It is especially suited for applications where operating distances of several meters and high anti-collision rates are required.

The UCODE EPC G2 IC is a product out of the NXP Semiconductors UCODE product family. The entire UCODE product family offers anti-collision and collision arbitration functionality. This allows a reader to simultaneously operate multiple labels/tags within its antenna field. A UCODE EPC G2 based label/tag requires no external power supply.

Its contactless interface generates the power supply via the antenna circuit by propagative energy transmission from the interrogator (read/write device), while the system clock is generated by an on-chip oscillator. Data transmitted from interrogator to label/tag is demodulated by the interface, and it also modulates the interrogator's electromagnetic field for data transmission from label/tag to interrogator. A label/tag can be operated without the need for line of sight or battery, as long as it is connected to a dedicated antenna for the targeted frequency range. When the label/tag is within the interrogator's operating range, the high-speed wireless interface allows data transmission in both directions.

2. Features

2.1 Key features

Interface fully compatible with UHF EPC G2 standard

Long-range solutions

Suitable for UHF RFID, allowing one IC to be used worldwide

Fast data rate

Forward link: 40 to 160 kbits/s

Return link: 40 to 640 kbits/s

512-bit of on-chip memory

96-bit EPC

64-bit tag Identifier

224-bit programmable user memory

32-bit access password

32-bit kill password

Runs on the same hardware infrastructure as the UCODE HSL and the UCODE EPC1.19

2.2 Key benefits

Tags/labels and readers available from various suppliers

First UHF EPC product operating worldwide

Highly advanced anti-collision resulting in highest identification speed

Reliable and robust RFID technology suitable for dense reader and noisy environment

Secure UHF communication; readers do not transmit EPC data

Broadest industry back-up - EPCglobal and ISO 18000-6C

Reader portfolio covers all regional demands

2.3 RF Interface Features

Contact-less transmission of data and supply energy (no battery needed)

Long-range operating distance

Operating frequency within the released operating bands from 860 MHz to 960 MHz

High data integrity: 16-bit CRC, framing

High anti-collision and inventory speed

Data rates:

R -> T: 40 to 160 kbps,

T -> R: 40 to 465 kbps (Divide ratio DR = 8) or 95 to 640 kbps (DR = 64/3)

Uses a slotted random anti-collision algorithm where the UCODE EPC G2 IC loads a random (or pseudo-random) number into a slot counter, decrement this slot counter based on interrogator commands, and reply to the interrogator when their slot counter reaches zero. Supports the full mandatory command set as well as optional and Customer commands according to the standard

© NXP B.V. 2006. All rights reserved.

2.4 Memory Features

96-bit EPC numbers supported

64-bit tag identifier (TID)

32-bit kill password to permanently disable the tag

32-bit access password to allow a transition into the secured transmission state

224-bit user memory with free definable memory organization

Inventoried flags and selected flag support the handling of persistence information

2.5 Security Features

Lock mechanism (write protection) for individual passwords and individual memory banks allow for permanent lock (permalock) status of a password or memory bank.

© NXP B.V. 2006. All rights reserved.

3. Applications

Supply Chain Management
Asset Management
Container Identification
Pallet & Case Tracking

4. Quick reference data

The SL3 ICS 10 supports global operation in different frequency bands. In principle, the SL3 ICS 10 has no restriction on the operating frequency. Based on regulation requirements the SL3 ICS 10 is released for the following frequency band.

Table 1: Quick reference data

Symbol	Parameter	Conditions	Min	Typ	Max	Unit
UHF	Frequency band		860	-	960	MHz

© NXP B.V. 2006. All rights reserved.

5. Block diagram

The SL3 ICS 10 IC consists of three major blocks:

Analog RF Interface

Digital Controller

EEPROM

The analog part provides stable supply voltage and demodulates data received from the reader for being processed by the digital part. Further, the modulation transistor of the analog part transmits data back to the reader.

The digital section includes the state machines, processes the protocol and handles communication with the EEPROM, which contains the EPC and the user data.

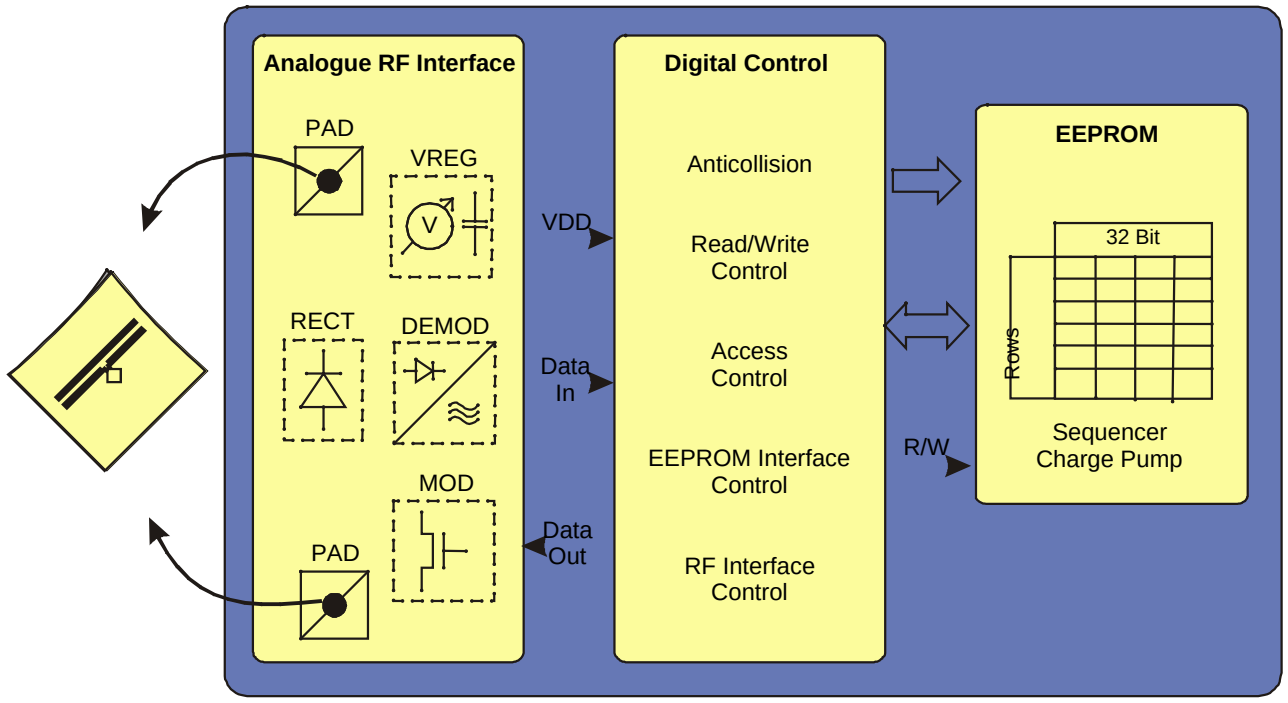

Fig 1. Block diagram of TAG IC

© NXP B.V. 2006. All rights reserved.

6. Command Overview

The UCODE EPC G2 supports the command set in accordance with EPC™ Radio-Frequency Identity Protocols Class-1 Generation-2 UHF RFID Protocol for Communications at 860 MHz to 960 MHz, Version 1.0.9.

Table 2 lists the full set of Mandatory commands as well as Optional commands. The implemented Custom commands are enabled in conformance with the EPCglobal specification and are specified within the Product data sheet for UCODE EPC G2.

Table 2. Command Overview

Command Overview	Code
Mandatory	
QueryRep	00
ACK	01
Query	1000
QueryAdjust	1001
Select	1010
NAK	11000000
Req_RN	11000001
Read	11000010
Write	11000011
Kill	11000100
Lock	11000101
Optional	
Access	11000110
BlockWrite	11000111
Custom	
BlockLock	11100000 00000000
ChangeEAS	11100000 00000011
EASAlarm	11100000 00000100

© NXP B.V. 2006. All rights reserved.

7. Revision history

Table 3. Revision history

Document ID	Release date	Data sheet status	Change notice	Doc. number	Supersedes
Modifications:	20 September 2006	Product short data sheet	-	129430	-
	• Initial version				

© NXP B.V. 2006. All rights reserved.

8. Legal information

8.1 Data sheet status

Document status[1][2]	Product status[3]	Definition
Objective [short] data sheet	Development	This document contains data from the objective specification for product development.
Preliminary [short] data sheet	Qualification	This document contains data from the preliminary specification.
Product [short] data sheet	Production	This document contains the product specification.

[1] Please consult the most recently issued document before initiating or completing a design.

[2] The term 'short data sheet' is explained in section "Definitions".

[3] The product status of device(s) described in this document may have changed since this document was published and may differ in case of multiple devices. The latest product status information is available on the Internet at URL http://www.nxp.com.

8.2 Definitions

Draft — The document is a draft version only. The content is still under internal review and subject to formal approval, which may result in modifications or additions. NXP Semiconductors does not give any representations or warranties as to the accuracy or completeness of information included herein and shall have no liability for the consequences of use of such information.

Short data sheet — A short data sheet is an extract from a full data sheet with the same product type number(s) and title. A short data sheet is intended for quick reference only and should not be relied upon to contain detailed and full information. For detailed and full information see the relevant full data sheet, which is available on request via the local NXP Semiconductors sales office. In case of any inconsistency or conflict with the short data sheet, the full data sheet shall prevail.

8.3 Disclaimers

General — Information in this document is believed to be accurate and reliable. However, NXP Semiconductors does not give any representations or warranties, expressed or implied, as to the accuracy or completeness of such information and shall have no liability for the consequences of use of such information.

Right to make changes — NXP Semiconductors reserves the right to make changes to information published in this document, including without limitation specifications and product descriptions, at any time and without notice. This document supersedes and replaces all information supplied prior to the publication hereof.

Suitability for use — NXP Semiconductors products are not designed, authorized or warranted to be suitable for use in medical, military, aircraft, space or life support equipment, nor in applications where failure or malfunction of a NXP Semiconductors product can reasonably be expected to result in personal injury, death or severe property or environmental damage. NXP Semiconductors accepts no liability for inclusion and/or use of NXP Semiconductors products in such equipment or applications and therefore such inclusion and/or use is at the customer's own risk.

Applications — Applications that are described herein for any of these products are for illustrative purposes only. NXP Semiconductors makes no representation or warranty that such applications will be suitable for the specified use without further testing or modification.

Limiting values — Stress above one or more limiting values (as defined in the Absolute Maximum Ratings System of IEC 60134) may cause permanent damage to the device. Limiting values are stress ratings only and operation of the device at these or any other conditions above those given in the Characteristics sections of this document is not implied. Exposure to limiting values for extended periods may affect device reliability.

Terms and conditions of sale — NXP Semiconductors products are sold subject to the general terms and conditions of commercial sale, as published at http://www.nxp.com/profile/terms, including those pertaining to warranty, intellectual property rights infringement and limitation of liability, unless explicitly otherwise agreed to in writing by NXP Semiconductors. In case of any inconsistency or conflict between information in this document and such terms and conditions, the latter will prevail.

No offer to sell or license — Nothing in this document may be interpreted or construed as an offer to sell products that is open for acceptance or the grant, conveyance or implication of any license under any copyrights, patents or other industrial or intellectual property rights.

8.4 Trademarks

Notice: All referenced brands, product names, service names and trademarks are the property of their respective owners.

<Name> — is a trademark of NXP B.V. (replace by text inset t001tma<1nn>)

9. Contact information

For additional information, please visit: **http://www.nxp.com**

For sales office addresses, send an email to: **sales.addresses@www.nxp.com**

© NXP B.V. 2006. All rights reserved.

10. Tables

Table 1: Quick reference data 4
Table 2. Command Overview 6
Table 3. Revision history 7

11. Figures

Fig 1. Block diagram of TAG IC 5

12. Contents

1 General description 1
2 Features 2
2.1 Key features 2
2.2 Key benefits 2
2.3 RF Interface Features 2
2.4 Memory Features 3
2.5 Security Features 3
3 Applications 4
4 Quick reference data 4
5 Block diagram 5
6 Command Overview 6
7 Revision history 7
8 Legal information 8
8.1 Data sheet status 8
8.2 Definitions 8
8.3 Disclaimers 8
8.4 Trademarks 8
9 Contact information 8
10 Tables 9
11 Figures 9
12 Contents 9

Please be aware that important notices concerning this document and the product(s) described herein, have been included in section 'Legal information'.

© NXP B.V. 2006. **All rights reserved.**

For more information, please visit: http://www.nxp.com
For sales office addresses, please send an email to: sales.addresses@www.nxp.com

Date of release: 20 September 2006
Document identifier: 129430

founded by
PHILIPS