• LT-455/450□U/W,LTM-455/450□U/W Series

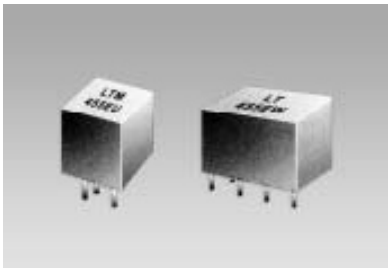

The LT-455&LTM-455 series ceramic filter is the miniature profile filter for communication use.

FEATURES

- Low Cost
- Communication Use
- Low Profile
- Excellent Temperature Stability
- High Durability

Electrical Specifications

Part Number		Center Frequency (Khz)	Insertion Loss (dB)max	Pass Band Ripple (dB)max	6dB Band Width (KHz)min	40dB Band Width (KHz)max (Lt455□U)	50dB Band Width (KHz)max (Lt455□U)	Stop Band Attenuation fo±100KHz (dB)min		Input/Output impedance (Ω)
								Lt455□U	Lt455□W	
LT455BU/W	LTM455BU/W	455±2.0	4	2	±15	±30	±30	28	40	1500
LT455CU/W	LTM455CU/W	455±2.0	4	2	±12.5	±24	±24	28	40	1500
LT455DU/W	LTM455DU/W	455±1.5	4	2	±10	±20	±20	28	40	1500
LT455EU/W	LTM455EU/W	455±1.5	6	2	±7.5	±15	±15	28	40	1500
LT455FU/W	LTM455FU/W	455±1.5	6	2	±6	±12.5	±12.5	28	40	2000
LT455GU/W	LTM455GU/W	455±1.5	6	2	±4.5	±10	±10	28	40	2000
LT455HU/W	LTM455HU/W	455 1.0	6	2	±3	±9	±9	28	40	2000
LT455IU/W	LTM455IU/W	455±1.0	6	2	±2	±7.5	±7.5	28	40	2000
LT455HTU/W	LTM455HTU/W	455±1.0	6	2	±3	±9	±9	35	60	2000

**Center Frequency 450KHz is Also Available*

Mechanical Dimensions(mm)

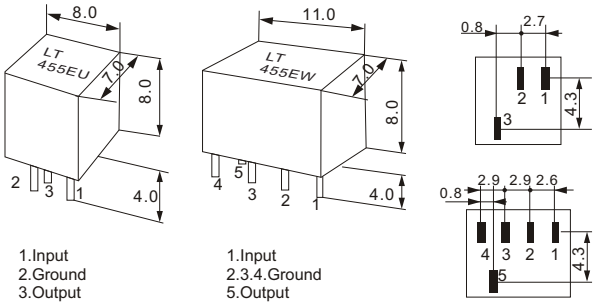

1.Input
2.Ground
3.Output

1.Input
2.3.4.Ground
5.Output

Mechanical Dimensions(mm)

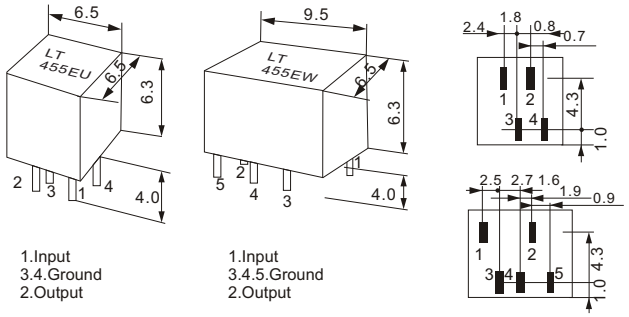

1.Input
3.4.Ground
2.Output

1.Input
3.4.5.Ground
2.Output

Test Circuit

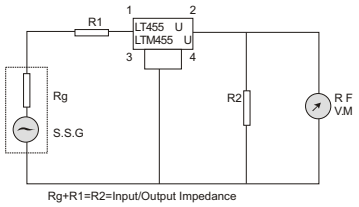

Rg+R1=R2=Input/Output Impedance

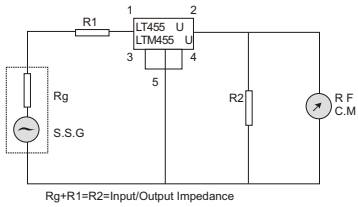

Rg+R1=R2=Input/Output Impedance

Characteristics

