Micro Commercial Components
20736 Marilla Street Chatsworth
CA 91311
Phone: (818) 701-4933
Fax: (818) 701-4939

SK32B-L THRU SK310B-L

3 Amp Schottky Rectifier 20 to 100 Volts

Features

- Lead Free Finish/Rohs Compliant (Note1) ("P"Suffix designates Compliant. See ordering information)
- For Surface Mount Applications
- Extremely Low Thermal Resistance
- Easy Pick And Place
- Halogen free available upon request by adding suffix "-HF"
- High Temp Soldering: 260°C for 10 Seconds At Terminals
- High Current Capability With Low Forward Voltage
- Epoxy meets UL 94 V-0 flammability rating
- Moisture Sensitivity Level 1

Maximum Ratings

- Operating Temperature: SK32B-L~SK34B-L: -55°C to +125°C
  SK35B-L~SK310B-L: -55°C to +150°C
- Storage Temperature: -55°C to +150°C
- Maximum Thermal Resistance; 10°C/W Junction To Lead

MCC Catalog Number	Device Marking	Maximum Recurrent Peak Reverse Voltage	Maximum RMS Voltage	Maximum DC Blocking Voltage
SK32B-L	SK32B	20V	14V	20V
SK33B-L	SK33B	30V	21V	30V
SK34B-L	SK34B	40V	28V	40V
SK35B-L	SK35B	50V	35V	50V
SK36B-L	SK36B	60V	42V	60V
SK38B-L	SK38B	80V	56V	80V
SK310B-L	SK310B	100V	70V	100V

Electrical Characteristics @ 25°C Unless Otherwise Specified

Average Forward Current	$I_{F(AV)}$	3.0A	T_L = 105°C (SK32B-L~SK34B-L) T_L = 125°C (SK35B-L~SK310B-L)
Peak Forward Surge Current	I_{FSM}	100A	8.3ms, half sine
Maximum Instantaneous Forward Voltage SK32B~SK34B SK35B~SK36B SK38B~SK310B	V_F	.50V .75V .85V	I_{FM} = 3.0A; T_J = 25°C*
Maximum DC Reverse Current At Rated DC Blocking Voltage	I_R	.5mA 20mA	T_J = 25°C T_J = 100°C

*Pulse test: Pulse width 200 μsec, Duty cycle 2%

Note: 1. High Temperature Solder Exemptions Applied, see EU Directive Annex 7.

DO-214AA
(SMB) (LEAD FRAME)

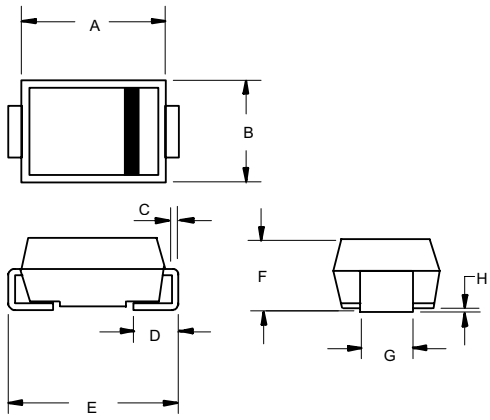

DIMENSIONS					
	INCHES		MM		
DIM	MIN	MAX	MIN	MAX	NOTE
A	.160	.185	4.06	4.70	
B	.130	.155	3.30	3.94	
C	.006	.012	0.15	0.31	
D	.030	.060	0.76	1.52	
E	.200	.220	5.08	5.59	
F	.079	.096	2.00	2.44	
G	.075	.087	1.91	2.21	
H	.002	.008	0.05	0.203	

SUGGESTED SOLDER PAD LAYOUT

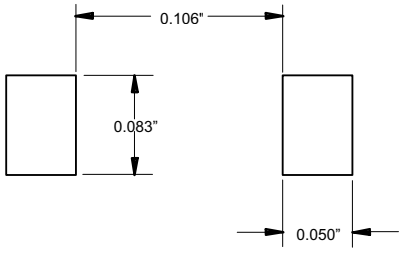

Figure 1
Typical Forward Characteristics

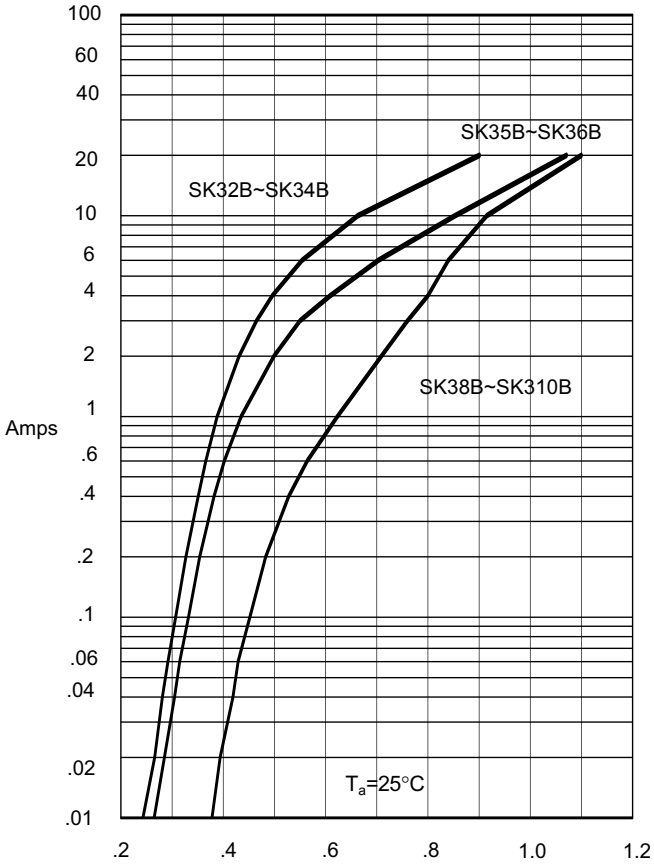

Instantaneous Forward Current - Amperes *versus*
Instantaneous Forward Voltage - Volts

Figure 2
Forward Derating Curve

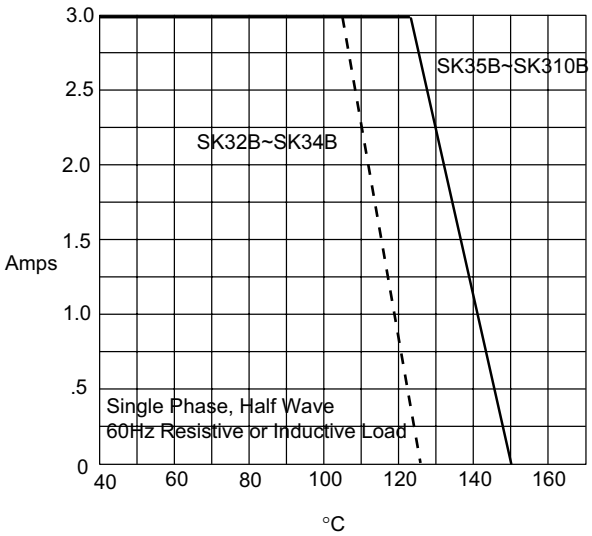

Average Forward Rectified Current - Amperesversus
Lead Temperature -°C

Figure 3
Typical Reverse Characteristics

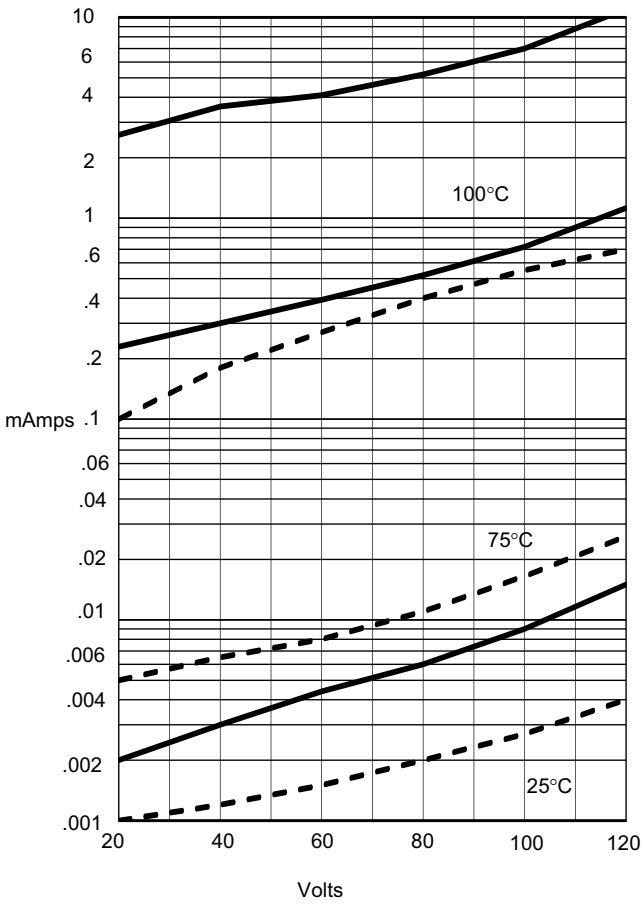

Instantaneous Reverse Leakage Current - MicroAmperes *versus*
Percent Of Rated Peak Reverse Voltage - %

Figure 4
Peak Forward Surge Current

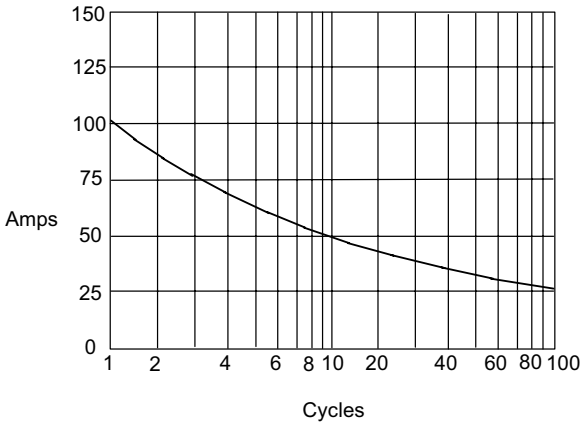

Peak Forward Surge Current - Amperes *versus*
Number Of Cycles At 60Hz - Cycles

SK32B~34B ——————
SK35B~310B- - - - - - -

Micro Commercial Components

Ordering Information :

Device	Packing
Part Number-TP	Tape&Reel: 3Kpcs/Reel

Note : Adding "-HF" suffix for halogen free, eg. Part Number-TP-HF

*****IMPORTANT NOTICE*****

Micro Commercial Components Corp. reserves the right to make changes without further notice to any product herein to make corrections, modifications , enhancements , improvements , or other changes . ***Micro Commercial Components Corp .*** does not assume any liability arising out of the application or use of any product described herein; neither does it convey any license under its patent rights ,nor the rights of others . The user of products in such applications shall assume all risks of such use and will agree to hold ***Micro Commercial Components Corp .*** and all the companies whose products are represented on our website, harmless against all damages.

*****LIFE SUPPORT*****

MCC's products are not authorized for use as critical components in life support devices or systems without the express written approval of Micro Commercial Components Corporation.

*****CUSTOMER AWARENESS*****

Counterfeiting of semiconductor parts is a growing problem in the industry. Micro Commercial Components (MCC) is taking strong measures to protect ourselves and our customers from the proliferation of counterfeit parts. MCC strongly encourages customers to purchase MCC parts either directly from MCC or from Authorized MCC Distributors who are listed by country on our web page cited below. Products customers buy either from MCC directly or from Authorized MCC Distributors are genuine parts, have full traceability, meet MCC's quality standards for handling and storage. **MCC will not provide any warranty coverage or other assistance for parts bought from Unauthorized Sources.** MCC is committed to combat this global problem and encourage our customers to do their part in stopping this practice by buying direct or from authorized distributors.