Ultra Series™ Crystal Oscillator
Si545 Data Sheet

Ultra Low Jitter Any-Frequency XO (80 fs), 0.2 to 1500 MHz

The Si545 Ultra Series™ oscillator utilizes Silicon Laboratories' advanced 4th generation DSPLL® technology to provide an ultra-low jitter, low phase noise clock at any output frequency. The device is factory-programmed to any frequency from 0.2 to 1500 MHz with <1 ppb resolution and maintains exceptionally low jitter for both integer and fractional frequencies across its operating range. The Si545 offers excellent reliability and frequency stability as well as guaranteed aging performance. On-chip power supply filtering provides industry-leading power supply noise rejection, simplifying the task of generating low jitter clocks in noisy systems that use switched-mode power supplies. Offered in industry-standard 3.2x5 mm and 5x7 mm footprints, the Si545 has a dramatically simplified supply chain that enables Silicon Labs to ship custom frequency samples 1-2 weeks after receipt of order. Unlike a traditional XO, where a different crystal is required for each output frequency, the Si545 uses one simple crystal and a DSPLL IC-based approach to provide the desired output frequency. This process also guarantees 100% electrical testing of every device. The Si545 is factory-configurable for a wide variety of user specifications, including frequency, output format, and OE pin location/polarity. Specific configurations are factory-programmed at time of shipment, eliminating the long lead times associated with custom oscillators.

KEY FEATURES

- Available with any frequency from 0.2 MHz to 1500 MHz
- Ultra low jitter: 80 fs Typ RMS (12 kHz – 20 MHz)
- Excellent PSRR and supply noise immunity: –80 dBc Typ
- 3x tighter stability than SAW oscillators
- 3.3 V, 2.5 V and 1.8 V V_{DD} supply operation from the same part number
- LVPECL, LVDS, CML, HCSL, CMOS, and Dual CMOS output options
- 3.2×5, 5x7 mm package footprints
- Samples available with 1-2 week lead times

APPLICATIONS

- 100G/200G/400G OTN, coherent optics
- 10G/40G/100G optical ethernet
- 3G-SDI/12G-SDI/24G-SDI broadcast video
- Datacenter
- Test and measurement
- Clock and data recovery
- FPGA/ASIC clocking



Pin Assignments

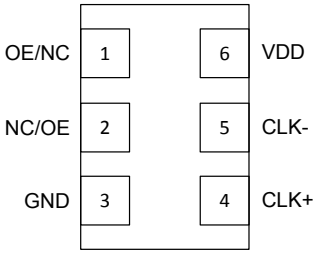

(Top View)

Pin #	Descriptions
1, 2	*Selectable via ordering option* OE = Output enable; NC = No connect
3	GND = Ground
4	CLK+ = Clock output
5	CLK- = Complementary clock output. Not used for CMOS.
6	VDD = Power supply

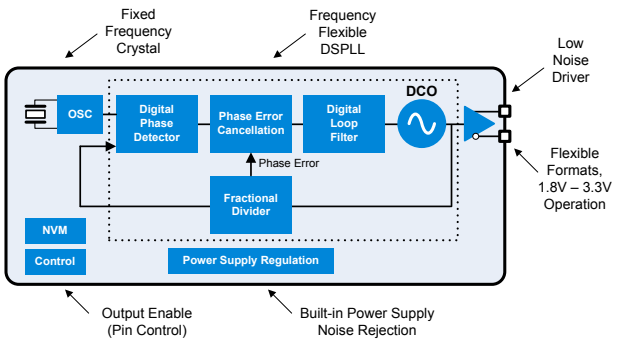

1. Ordering Guide

The Si545 XO supports a variety of options including frequency, output format, and OE pin location/polarity, as shown in the chart below. Specific device configurations are programmed into the part at time of shipment, and samples are available in 1-2 weeks. Silicon Laboratories provides an online part number configuration utility to simplify this process. Refer to www.silabs.com/oscillators to access this tool and for further ordering instructions.

XO Series	Description
545	Single Frequency

	Temp Stability	Total Stability[2]
A	20 ppm	50 ppm

	Package
A	5x7 mm
B	3.2x5 mm

	Temperature Grade
G	-40 to 85 °C

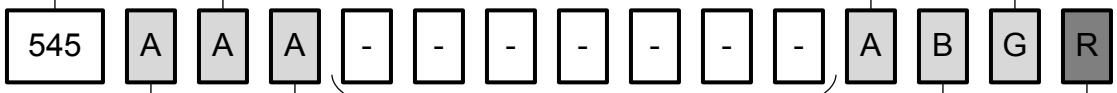

Signal Format	VDD Range	Order Option
LVPECL	2.5, 3.3 V	A
LVDS	1.8, 2.5, 3.3 V	B
CMOS	1.8, 2.5, 3.3 V	C
CML	1.8, 2.5, 3.3 V	D
HCSL	1.8, 2.5, 3.3 V	E
Dual CMOS (In-Phase)	1.8, 2.5, 3.3 V	F
Dual CMOS (Complementary)	1.8, 2.5, 3.3 V	G
Custom[1]	1.8, 2.5, 3.3 V	X

	OE Pin	OE Polarity
A	Pin 1	Active High
B	Pin 1	Active Low
C	Pin 2	Active High
D	Pin 2	Active Low

Device Revision

	Reel
R	Tape and Reel
<Blank>	Coil Tape

Frequency Code[3]	Description
Mxxxxxx	F_{CLK} < 1 MHz
xMxxxxx	1 MHz ≤ F_{CLK} < 10 MHz
xxMxxxx	10 MHz ≤ F_{CLK} < 100 MHz
xxxMxxx	100 MHz ≤ F_{CLK} < 1000 MHz
xxxxMxx	1000 MHz ≤ F_{CLK} ≤ 1500 MHz
xxxxxx	Custom code if F_{CLK} > 6 digits

Notes:

1. Contact Silicon Labs for non-standard configurations.
2. Total stability includes temp stability, initial accuracy, load pulling, VDD variation, and 20 year aging at 70 °C.
3. For example: 156.25 MHz = 156M250; 25 MHz = 25M0000. Create custom part numbers at www.silabs.com/oscillators.

1.1 Technical Support

Frequently Asked Questions (FAQ)	www.silabs.com/Si545-FAQ
Oscillator Phase Noise Lookup Utility	www.silabs.com/oscillator-phase-noise-lookup
Quality and Reliability	www.silabs.com/quality
Development Kits	www.silabs.com/oscillator-tools

2. Electrical Specifications

Table 2.1. Electrical Specifications

V_{DD} = 1.8 V, 2.5 or 3.3 V ± 5%, T_A = –40 to 85 ºC

Parameter	Symbol	Test Condition/Comment	Min	Typ	Max	Unit
Temperature Range	T_A		–40	—	85	ºC
Frequency Range	F_{CLK}	LVPECL, LVDS, CML	0.2	—	1500	MHz
		HCSL	0.2	—	400	MHz
		CMOS, Dual CMOS	0.2	—	250	MHz
Supply Voltage	V_{DD}	3.3 V	3.135	3.3	3.465	V
		2.5 V	2.375	2.5	2.625	V
		1.8 V	1.71	1.8	1.89	V
Supply Current	I_{DD}	LVPECL (output enabled)	—	107	153	mA
		LVDS/CML (output enabled)	—	83	121	mA
		HCSL (output enabled)	—	86	126	mA
		CMOS (output enabled)	—	87	127	mA
		Dual CMOS (output enabled)	—	92	141	mA
		Tristate Hi-Z (output disabled)	—	73	112	mA
Temperature Stability		Frequency stability Grade A	–20	—	20	ppm
Total Stability[1]	F_{STAB}	Frequency stability Grade A	–50	—	50	ppm
Rise/Fall Time (20% to 80% V_{PP})	T_R/T_F	LVPECL/LVDS/CML	—	—	350	ps
		CMOS / Dual CMOS, (C_L = 5 pF)	—	0.5	1.5	ns
		HCSL, F_{CLK} >50 MHz	—	—	550	ps
Duty Cycle	D_C	All formats	45	—	55	%
Output Enable (OE)[2]	V_{IH}		0.7 × V_{DD}	—	—	V
	V_{IL}		—	—	0.3 × V_{DD}	V
	T_D	Output Disable Time, F_{CLK} > 10 MHz	—	—	3	µs
	T_E	Output Enable Time, F_{CLK} > 10 MHz	—	—	20	µs
Powerup Time	t_{OSC}	Time from 0.9 × V_{DD} until output frequency (F_{CLK}) within spec	—	—	10	ms
LVPECL Output Option[3]	V_{OC}	Mid-level	V_{DD} – 1.42	—	V_{DD} – 1.25	V
	V_O	Swing (diff)	1.1	—	1.9	V_{PP}
LVDS Output Option[4]	V_{OC}	Mid-level (2.5 V, 3.3 V VDD)	1.125	1.20	1.275	V
		Mid-level (1.8 V VDD)	0.8	0.9	1.0	V
	V_O	Swing (diff)	0.5	0.7	0.9	V_{PP}

Parameter	Symbol	Test Condition/Comment	Min	Typ	Max	Unit
HCSL Output Option[5]	V_{OH}	Output voltage high	660	750	850	mV
	V_{OL}	Output voltage low	–150	0	150	mV
	V_C	Crossing voltage	250	350	550	mV
CML Output Option (AC-Coupled)	V_O	Swing (diff)	0.6	0.8	1.0	V_{PP}
CMOS Output Option	V_{OH}	I_{OH} = 8/6/4 mA for 3.3/2.5/1.8 V VDD	0.85 × V_{DD}	—	—	V
	V_{OL}	I_{OL} = 8/6/4 mA for 3.3/2.5/1.8 V VDD	—	—	0.15 × V_{DD}	V

Notes:
1. Total Stability includes ±20 ppm temperature stability, initial accuracy, load pulling, VDD variation, and aging for 20 yrs at 70 ºC.
2. OE includes a 50 kΩ pull-up to VDD for OE active high. Includes a 50 kΩ pull-down to GND for OE active low.
3. 50 Ω to V_{DD} – 2.0 V.
4. R_{term} = 100 Ω (differential).
5. 50 Ω to GND.

Table 2.2. Clock Output Phase Jitter and PSRR

V_{DD} = 1.8 V, 2.5 or 3.3 V ± 5%, T_A = –40 to 85 ºC

Parameter	Symbol	Test Condition/Comment	Min	Typ	Max	Unit
Phase Jitter (RMS, 12kHz - 20MHz)[1] 3.2 x 5 mm, All Differential Formats	ϕ_J	F_{CLK} ≥ 200 MHz	—	80	110	fs
		100 MHz ≤ F_{CLK} < 200 MHz	—	100	150	fs
		LVPECL @ 156.25 MHz	—	90	125	fs
Phase Jitter (RMS, 12kHz - 20MHz)[1] 5 x 7 mm, All Differential Formats		F_{CLK} ≥ 200 MHz	—	80	130	fs
		100 MHz ≤ F_{CLK} < 200 MHz	—	100	150	fs
		LVPECL @ 156.25 MHz	—	90	125	fs
Phase Jitter (RMS, 12kHz - 20MHz)[1] CMOS / Dual CMOS Formats	ϕ_J	10 MHz ≤ F_{CLK} ≤ 250 MHz	—	200	—	fs
Spurs Induced by External Power Supply Noise, 50 mVpp Ripple. LVDS 156.25 MHz Output	PSRR	100 kHz sine wave	—	-83	—	dBc
		200 kHz sine wave	—	-83	—	
		500 kHz sine wave	—	-82	—	
		1 MHz sine wave	—	-85	—	

Note:
1. Guaranteed by characterization. Jitter inclusive of any spurs.

Table 2.3. 3.2 x 5 mm Clock Output Phase Noise (Typical)

Offset Frequency (f)	156.25 MHz LVDS	200 MHz LVDS	644.53125 MHz LVDS	Unit
100 Hz	–106	–102	–92	
1 kHz	–133	–129	–119	
10 kHz	–140	–138	–127	
100 kHz	–145	–142	–132	dBc/Hz
1 MHz	–152	–150	–139	
10 MHz	–160	–160	–154	
20 MHz	–161	–161	–155	
Offset Frequency (f)	**156.25 MHz LVPECL**	**200 MHz LVPECL**	**644.53125 MHz LVPECL**	**Unit**
100 Hz	–103	–104	–91	
1 kHz	–130	–128	–118	
10 kHz	–140	–138	–127	
100 kHz	–145	–142	–132	dBc/Hz
1 MHz	–152	–150	–140	
10 MHz	–162	–162	–155	
20 MHz	–163	–163	–156	

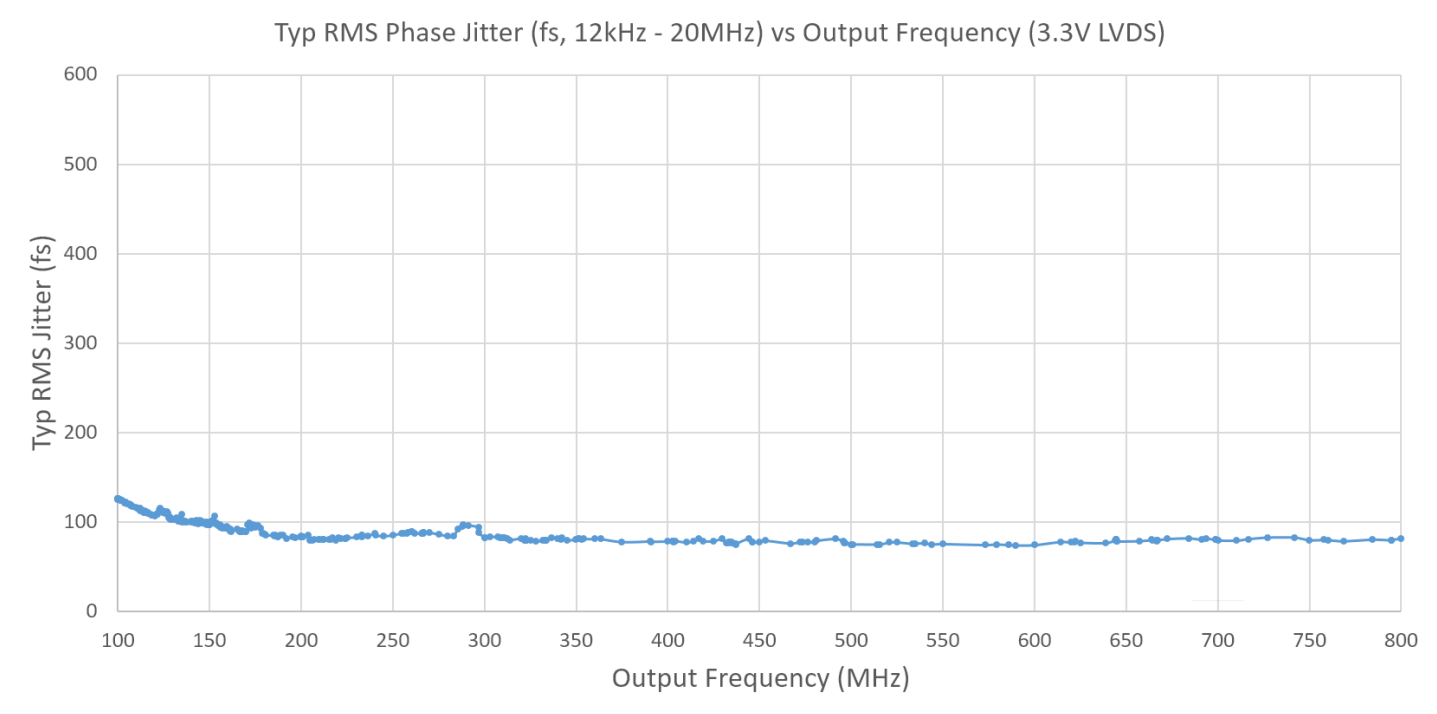

Phase jitter measured with Agilent E5052 using a differential-to-single ended converter (balun or buffer). Measurements collected for >700 commonly used frequencies. Phase noise plots for specific frequencies are available using our free, online Oscillator Phase Noise Lookup Tool at www.silabs.com/oscillators.

Figure 2.1. Phase Jitter vs. Output Frequency

Table 2.4. Environmental Compliance and Package Information

Parameter	Test Condition
Mechanical Shock	MIL-STD-883, Method 2002
Mechanical Vibration	MIL-STD-883, Method 2007
Solderability	MIL-STD-883, Method 2003
Gross and Fine Leak	MIL-STD-883, Method 1014
Resistance to Solder Heat	MIL-STD-883, Method 2036
Moisture Sensitivity Level (MSL)	1
Contact Pads	Gold over Nickel

Note:

1. For additional product information not listed in the data sheet (e.g. RoHS Certifications, MDDS data, qualification data, REACH Declarations, ECCN codes, etc.), refer to our "Corporate Request For Information" portal found here: www.silabs.com/support/quality/Pages/RoHSInformation.aspx.

Table 2.5. Thermal Conditions

Package	Parameter	Symbol	Test Condition	Value	Unit
3.2 × 5 mm 6-pin CLCC	Thermal Resistance Junction to Ambient	Θ_{JA}	Still Air, 85 °C	80.3	°C/W
	Thermal Resistance Junction to Board	Θ_{JB}	Still Air, 85 °C	50.8	°C/W
	Max Junction Temperature	T_J	Still Air, 85 °C	125	°C
5 × 7 mm 6-pin CLCC	Thermal Resistance Junction to Ambient	Θ_{JA}	Still Air, 85 °C	68.4	°C/W
	Thermal Resistance Junction to Board	Θ_{JB}	Still Air, 85 °C	52.9	°C/W
	Max Junction Temperature	T_J	Still Air, 85 °C	125	°C

Table 2.6. Absolute Maximum Ratings[1]

Parameter	Symbol	Rating	Unit
Maximum Operating Temp.	T_{AMAX}	95	°C
Storage Temperature	T_S	–55 to 125	°C
Supply Voltage	V_{DD}	–0.5 to 3.8	°C
Input Voltage	V_{IN}	–0.5 to V_{DD} + 0.3	V
ESD HBM (JESD22-A114)	HBM	2.0	kV
Solder Temperature[2]	T_{PEAK}	260	°C
Solder Time at T_{PEAK}[2]	T_P	20–40	sec

Notes:

1. Stresses beyond those listed in this table may cause permanent damage to the device. Functional operation specification compliance is not implied at these conditions. Exposure to maximum rating conditions for extended periods may affect device reliability.
2. The device is compliant with JEDEC J-STD-020.

3. Dual CMOS Buffer

Dual CMOS output format ordering options support either complementary or in-phase signals for two identical frequency outputs. This feature enables replacement of multiple XOs with a single Si545 device.

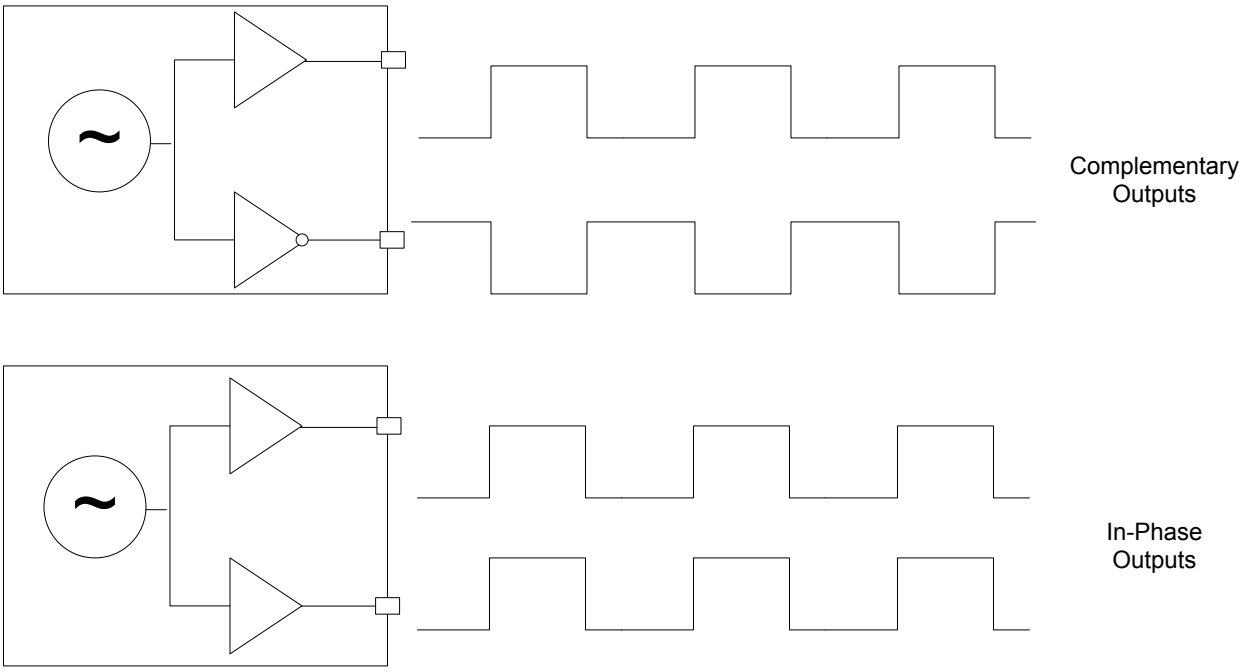

Figure 3.1. Integrated 1:2 CMOS Buffer Supports Complementary or In-Phase Outputs

4. Recommended Output Terminations

The output drivers support both AC-coupled and DC-coupled terminations as shown in figures below.

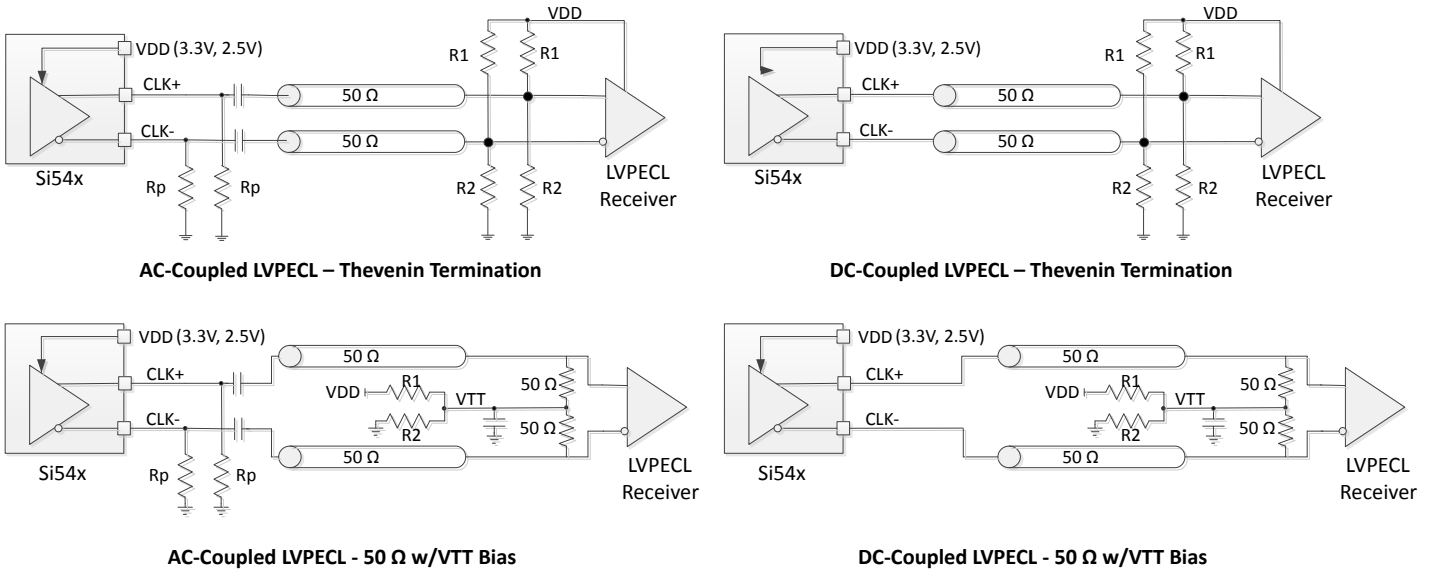

Figure 4.1. LVPECL Output Terminations

AC Coupled LVPECL Termination Resistor Values			
VDD	R1	R2	Rp
3.3 V	127 Ω	82.5 Ω	130 Ω
2.5 V	250 Ω	62.5 Ω	90 Ω

DC Coupled LVPECL Termination Resistor Values		
VDD	R1	R2
3.3 V	127 Ω	82.5 Ω
2.5 V	250 Ω	62.5 Ω

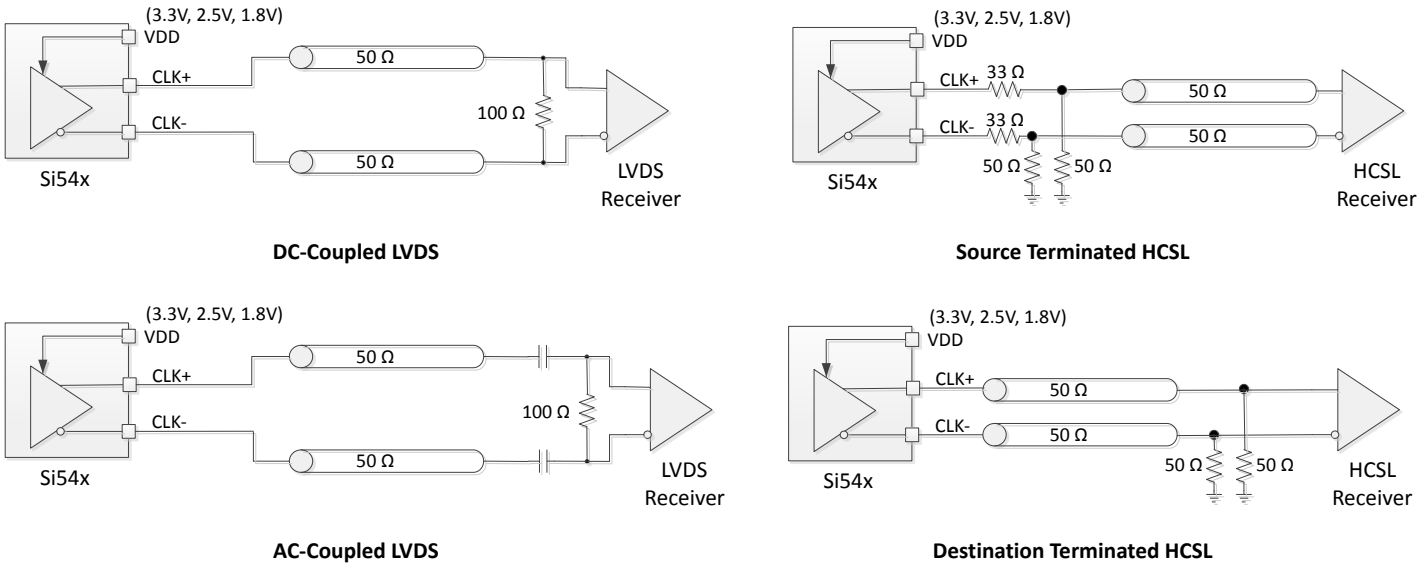

Figure 4.2. LVDS and HCSL Output Terminations

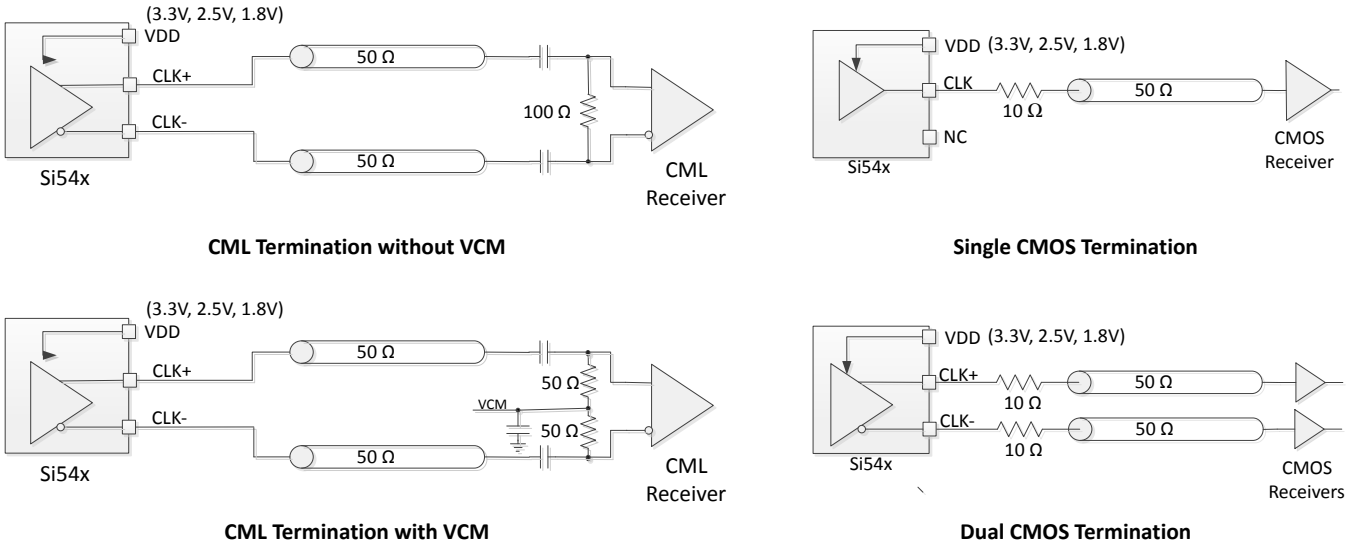

Figure 4.3. CML and CMOS Output Terminations

5. Package Outline

5.1 Package Outline (5×7 mm)

The figure below illustrates the package details for the 5×7 mm Si545. The table below lists the values for the dimensions shown in the illustration.

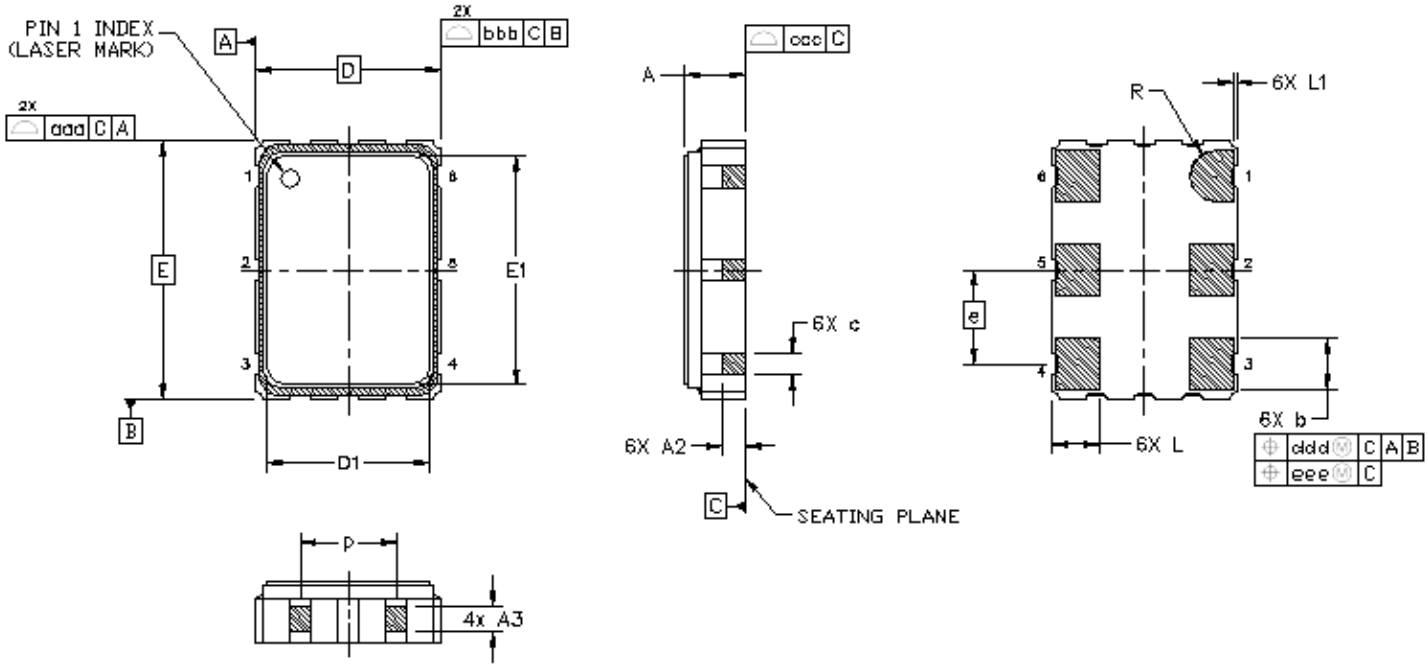

Figure 5.1. Si545 (5×7 mm) Outline Diagram

Table 5.1. Package Diagram Dimensions (mm)

Dimension	Min	Nom	Max		Dimension	Min	Nom	Max
A	1.13	1.28	1.43		L	1.17	1.27	1.37
A2	0.50	0.55	0.60		L1	0.05	0.10	0.15
A3	0.50	0.55	0.60		p	1.70	—	1.90
b	1.30	1.40	1.50		R	0.70 REF		
c	0.50	0.60	0.70		aaa	0.15		
D	5.00 BSC				bbb	0.15		
D1	4.30	4.40	4.50		ccc	0.10		
e	2.54 BSC				ddd	0.10		
E	7.00 BSC				eee	0.05		
E1	6.10	6.20	6.30					

Notes:

1. All dimensions shown are in millimeters (mm) unless otherwise noted.
2. Dimensioning and Tolerancing per ANSI Y14.5M-1994.

5.2 Package Outline (3.2×5 mm)

The figure below illustrates the package details for the 3.2×5 mm Si545. The table below lists the values for the dimensions shown in the illustration.

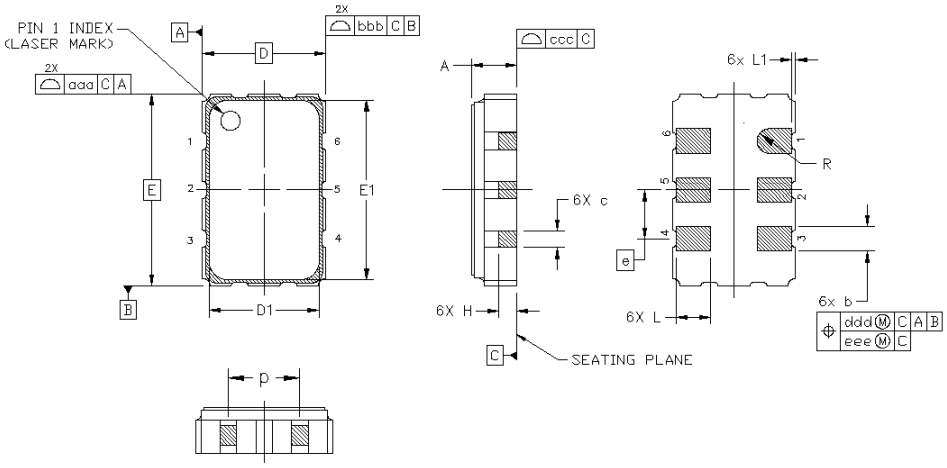

Figure 5.2. Si545 (3.2×5 mm) Outline Diagram

Table 5.2. Package Diagram Dimensions (mm)

Dimension	Min	Nom	Max
A	1.06	1.17	1.33
b	0.54	0.64	0.74
c	0.35	0.45	0.55
D		3.20 BSC	
D1	2.55	2.60	2.65
e		1.27 BSC	
E		5.00 BSC	
E1	4.35	4.40	4.45
H	0.45	0.55	0.65
L	0.80	0.90	1.00
L1	0.05	0.10	0.15
p	1.36	1.46	1.56
R		0.32 REF	
aaa		0.15	
bbb		0.15	
ccc		0.10	
ddd		0.10	
eee		0.05	

Notes:

1. All dimensions shown are in millimeters (mm) unless otherwise noted.
2. Dimensioning and Tolerancing per ANSI Y14.5M-1994.

6. PCB Land Pattern

6.1 PCB Land Pattern (5×7 mm)

The figure below illustrates the 5×7 mm PCB land pattern for the Si545. The table below lists the values for the dimensions shown in the illustration.

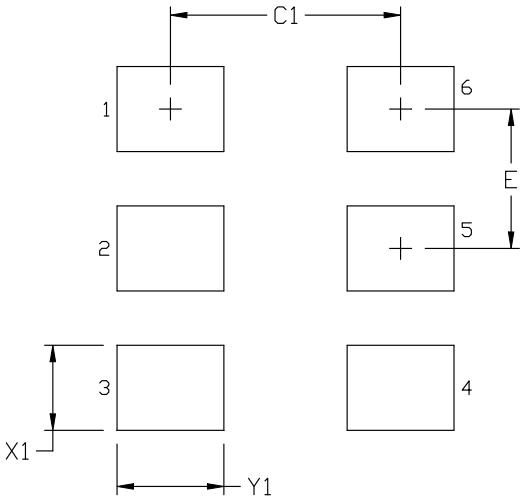

Figure 6.1. Si545 (5×7 mm) PCB Land Pattern

Table 6.1. PCB Land Pattern Dimensions (mm)

Dimension	(mm)
C1	4.20
E	2.54
X1	1.55
Y1	1.95

Notes:

General

1. All dimensions shown are in millimeters (mm) unless otherwise noted.
2. Dimensioning and Tolerancing is per the ANSI Y14.5M-1994 specification.
3. This Land Pattern Design is based on the IPC-7351 guidelines.
4. All dimensions shown are at Maximum Material Condition (MMC). Least Material Condition (LMC) is calculated based on a Fabrication Allowance of 0.05 mm.

Solder Mask Design

1. All metal pads are to be non-solder mask defined (NSMD). Clearance between the solder mask and the metal pad is to be 60 µm minimum, all the way around the pad.

Stencil Design

1. A stainless steel, laser-cut and electro-polished stencil with trapezoidal walls should be used to assure good solder paste release.
2. The stencil thickness should be 0.125 mm (5 mils).
3. The ratio of stencil aperture to land pad size should be 1:1.

Card Assembly

1. A No-Clean, Type-3 solder paste is recommended.
2. The recommended card reflow profile is per the JEDEC/IPC J-STD-020C specification for Small Body Components.

6.2 PCB Land Pattern (3.2×5 mm)

The figure below illustrates the 3.2×5.0 mm PCB land pattern for the Si545. The table below lists the values for the dimensions shown in the illustration.

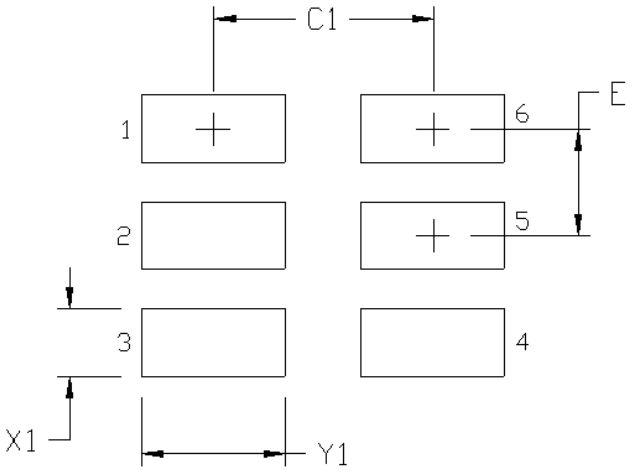

Figure 6.2. Si545 (3.2×5 mm) PCB Land Pattern

Table 6.2. PCB Land Pattern Dimensions (mm)

Dimension	(mm)
C1	2.60
E	1.27
X1	0.80
Y1	1.70

Notes:

General

1. All dimensions shown are in millimeters (mm) unless otherwise noted.
2. Dimensioning and Tolerancing is per the ANSI Y14.5M-1994 specification.
3. This Land Pattern Design is based on the IPC-7351 guidelines.
4. All dimensions shown are at Maximum Material Condition (MMC). Least Material Condition (LMC) is calculated based on a Fabrication Allowance of 0.05 mm.

Solder Mask Design

1. All metal pads are to be non-solder mask defined (NSMD). Clearance between the solder mask and the metal pad is to be 60 µm minimum, all the way around the pad.

Stencil Design

1. A stainless steel, laser-cut and electro-polished stencil with trapezoidal walls should be used to assure good solder paste release.
2. The stencil thickness should be 0.125 mm (5 mils).
3. The ratio of stencil aperture to land pad size should be 1:1.

Card Assembly

1. A No-Clean, Type-3 solder paste is recommended.
2. The recommended card reflow profile is per the JEDEC/IPC J-STD-020C specification for Small Body Components.

7. Top Marking

The figure below illustrates the mark specification for the Si545. The table below lists the line information.

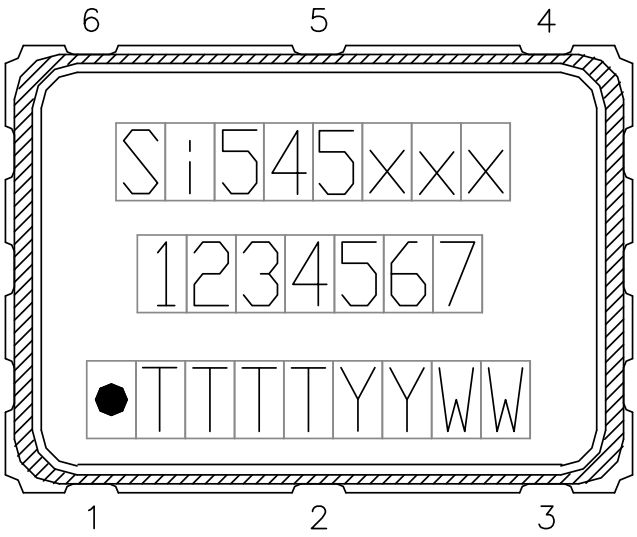

Figure 7.1. Mark Specification

Table 7.1. Si545 Top Mark Description

Line	Position	Description
1	1–8	"Si545", xxx = Ordering Option 1, Option 2, Option 3 (e.g. Si545AAA)
2	1–7	Frequency Code (e.g. 100M000 or 6-digit custom code as described in the Ordering Guide)
3	**Trace Code**	
	Position 1	Pin 1 orientation mark (dot)
	Position 2	Product Revision (B)
	Position 3–5	Tiny Trace Code (3 alphanumeric characters per assembly release instructions)
	Position 6–7	Year (last two digits of the year), to be assigned by assembly site (ex: 2017 = 17)
	Position 8–9	Calendar Work Week number (1–53), to be assigned by assembly site

8. Revision History

Revision 0.71

December 11, 2017

- Added 5x7 package and land pattern.

Revision 0.7

June 27, 2017

- Initial release.



ClockBuilder Pro

One-click access to Timing tools, documentation, software, source code libraries & more. Available for Windows and iOS (CBGo only).

www.silabs.com/CBPro

Timing Portfolio
www.silabs.com/timing

SW/HW
www.silabs.com/CBPro

Quality
www.silabs.com/quality

Support and Community
community.silabs.com

Disclaimer
Silicon Labs intends to provide customers with the latest, accurate, and in-depth documentation of all peripherals and modules available for system and software implementers using or intending to use the Silicon Labs products. Characterization data, available modules and peripherals, memory sizes and memory addresses refer to each specific device, and "Typical" parameters provided can and do vary in different applications. Application examples described herein are for illustrative purposes only. Silicon Labs reserves the right to make changes without further notice and limitation to product information, specifications, and descriptions herein, and does not give warranties as to the accuracy or completeness of the included information. Silicon Labs shall have no liability for the consequences of use of the information supplied herein. This document does not imply or express copyright licenses granted hereunder to design or fabricate any integrated circuits. The products are not designed or authorized to be used within any Life Support System without the specific written consent of Silicon Labs. A "Life Support System" is any product or system intended to support or sustain life and/or health, which, if it fails, can be reasonably expected to result in significant personal injury or death. Silicon Labs products are not designed or authorized for military applications. Silicon Labs products shall under no circumstances be used in weapons of mass destruction including (but not limited to) nuclear, biological or chemical weapons, or missiles capable of delivering such weapons.

Trademark Information
Silicon Laboratories Inc.® , Silicon Laboratories®, Silicon Labs®, SiLabs® and the Silicon Labs logo®, Bluegiga®, Bluegiga Logo®, Clockbuilder®, CMEMS®, DSPLL®, EFM®, EFM32®, EFR, Ember®, Energy Micro, Energy Micro logo and combinations thereof, "the world's most energy friendly microcontrollers", Ember®, EZLink®, EZRadio®, EZRadioPRO®, Gecko®, ISOmodem®, Micrium, Precision32®, ProSLIC®, Simplicity Studio®, SiPHY®, Telegesis, the Telegesis Logo®, USBXpress®, Zentri and others are trademarks or registered trademarks of Silicon Labs. ARM, CORTEX, Cortex-M3 and THUMB are trademarks or registered trademarks of ARM Holdings. Keil is a registered trademark of ARM Limited. All other products or brand names mentioned herein are trademarks of their respective holders.

SILICON LABS®

Silicon Laboratories Inc.
400 West Cesar Chavez
Austin, TX 78701
USA

http://www.silabs.com