SILICON LABS

www.silabs.com

Timing Selector Guide

SPRING 2014



10 YEAR OPERATING LIFE



BEST-IN-CLASS STABILITY OVER TEMPERATURE



2 WEEK LEAD TIMES THE INDUSTRY'S BEST



LOW-COST, HIGH-VOLUME CMOS FOUNDRIES

Clock and Oscillator Timing IC Solutions

Silicon Labs is a one stop shop providing a complete portfolio of clocks, buffers, oscillators and jitter attenuating clocks.

One-Stop-Shop — industry-leading portfolio of oscillators, clock generators, clock buffers and jitter attenuating clocks

Fast — custom oscillators and clocks in minutes, not months

Clock Tree Services — receive clock tree design guidance from Silicon Labs' timing experts in under 48 hours

Support — expert technical support and deep applications knowledge to accelerate your development schedules

Flexible — Silicon Labs' clocks and oscillators support any combination of frequencies, minimizing BOM count and complexity

Customized — our flagship products are highly customizable over the web and ship in days, not weeks

Performance — highly-integrated, low jitter timing solutions simplify design and optimize system performance

Clock Generation

WEB-CONFIGURABLE FACTORY-CUSTOMIZED CLOCK GENERATORS AVAILABLE AT: www.silabs.com/custom-timing

Any-Frequency, Any-Output Differential/CMOS Clocks

Silicon Labs' differential + LVCMOS clock generators provide any rate, any output frequency synthesis. Any combination of output frequencies can be generated exactly with 0 ppm error. Independent signal format and VDDO options provide integrated level translation, supporting LVPECL/LVDS/HCSL/LVCMOS clock generation up to 710 MHz with sub 1 ps rms phase jitter.

Si5338 FEATURES

- Generates any frequency on any output, from 160 kHz to 350 MHz and select frequencies to 710 MHz
- Exact clock synthesis (0 ppm error)
- Crystal or clock input
- 4 differential outputs or 8 single-ended outputs
- Any format, on any output: LVPECL, LVDS, HCSL, LVCMOS, HSTL, SSTL and CML
- Independent VDDO per output eliminates external level translators (1.5, 1.8, 2.5, 3.3 V)
- Low phase jitter: 1 ps rms
- I²C programmable or pin-controlled
- Excellent PSRR, no discrete components
- Spread spectrum clock generation
- User-definable control pins: Powerdown, Output Enable, Frequency Select, Spread Select
- Factory-customizable clocks w/2 week lead times www.silabs.com/custom-timing

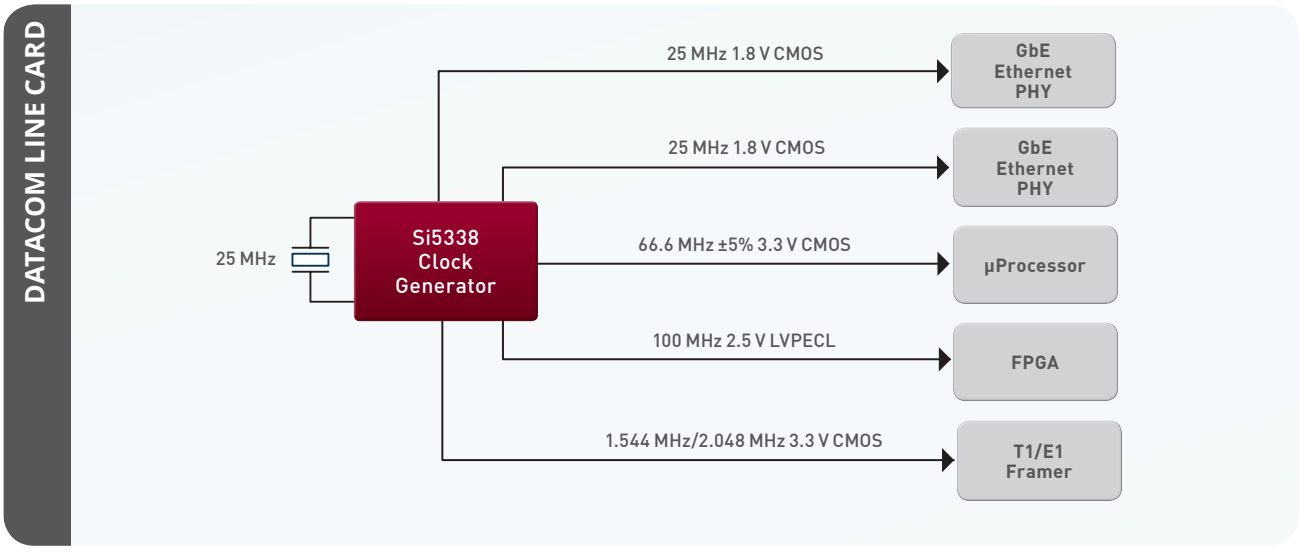

PART NUMBER	CONTROL	CLOCK INPUT/ OUTPUTS	INPUT FREQUENCY (MHZ)	OUTPUT FREQUENCY (MHZ)	PHASE JITTER (RMS)	VDD	VDDO	OUTPUT	PACKAGE
Si5334	Pin	1/4	5 - 710 (Clock), 8 - 30 (Xtal)	0.16 - 710 MHz 0.16 - 350 MHz 0.16 - 200 MHz	1.0 ps	1.8, 2.5, 3.3 V	1.8, 2.5, 3.3 V	LVCMOS, LVDS, LVPECL, HCSL, SSTL, HSTL	QFN24
Si5335	Pin	1/4	10 - 350 (Clock), 25/27 (Xtal)	1 - 350 MHz	1.0 ps	1.8, 2.5, 3.3 V	1.8, 2.5, 3.3 V	LVCMOS, LVDS, LVPECL, HCSL, SSTL, HSTL, CML	QFN24
Si5338	I²C	1/4	5 - 710 (Clock), 8 - 30 (Xtal)	0.16 - 710 MHz 0.16 - 350 MHz 0.16 - 200 MHz	1.0 ps	1.8, 2.5, 3.3 V	1.8, 2.5, 3.3 V	LVCMOS, LVDS, LVPECL, HCSL, SSTL, HSTL, CML	QFN24

Tiny CMOS Clocks

Silicon Labs' highly flexible, factory and I²C programmable tiny clock LVCMOS generators can be customized to generate multiple frequencies with significantly lower jitter, lower power and smaller size than competing solutions. Customization options are available for frequency selection, output enable control, or minimizing EMI, including customizable spread percentage, modulation rate, output impedance and rise time/fall time.

Si512xx TINY CLOCK FEATURES

- Up to three customizable output frequencies from 3 to 200 MHz
- Accepts 8 to 48 MHz crystal or 3 to 166 MHz external reference clock
- Low cycle-to-cycle jitter: <150 ps
- Low power: 2.3 mA (typ) at 48 MHz output, 25 MHz xtal in and VDD = 3.3 V
- Center spread modulation from 0.25 to 1.0%, with 0.125% resolution
- Programmable spread modulation rate from 30 - 62 kHz
- Customizable drive strengths (four levels for each output)
- Customizable control pins (PD#/OE/SSON#/FS)
- Supply range: 1.8 V for Si51214; 2.5 to 3.3 V for other devices
- Ultra-compact packages
  - 6-pin TDFN (1.2 mm x 1.4 mm x 0.75 mm)
  - 8-pin TDFN (1.6 mm x 1.4 mm x 0.75 mm)
- Factory programmable OTP
- Two week sample lead time

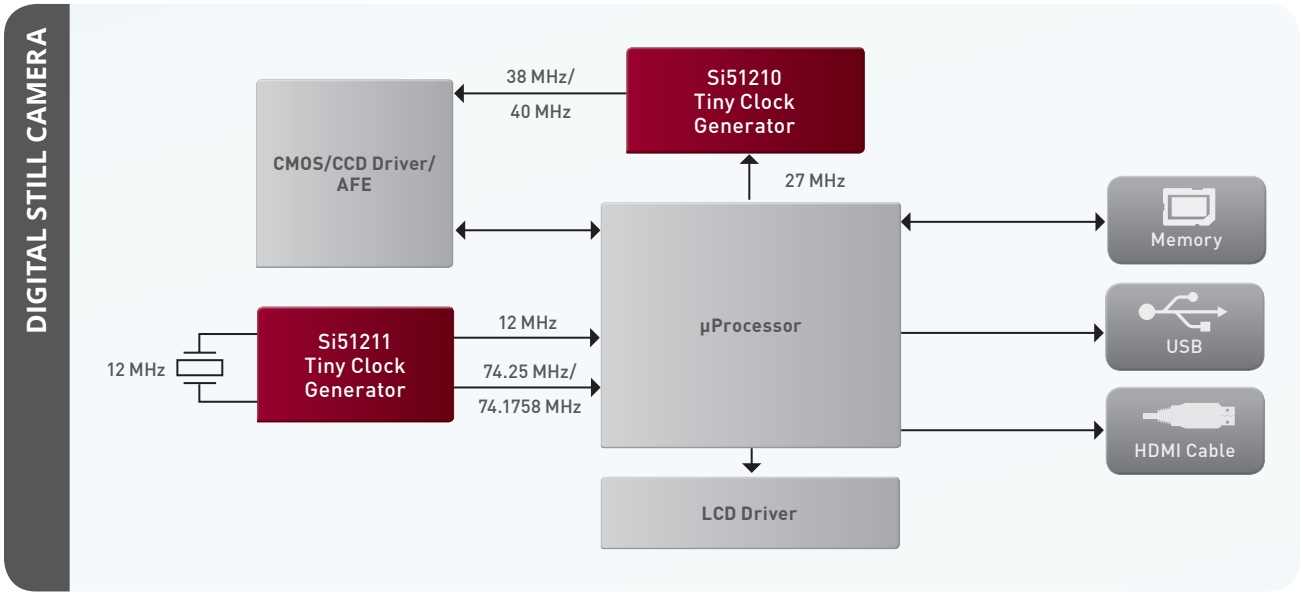

PART NUMBER	CONTROL	CLOCK INPUT/ OUTPUTS	INPUT FREQUENCY (MHz)	OUTPUT FREQUENCY (MHz)	PERIOD JITTER (PP)	VDD	VDDO	OUTPUT	PACKAGE
Si51210	Pin	1/2	3 - 166 (Clock), 8 - 48 (Xtal)	3 to 200 MHz	—	2.5 to 3.3 V	—	LVCMOS	TDFN6
Si51211	Pin	1/3	3 - 166 (Clock), 8 - 48 (Xtal)	3 to 200 MHz	—	2.5 to 3.3 V	1.8, 2.5, 3.3 V	LVCMOS	TDFN8
Si51214	Pin	1/2	3 - 166 (Clock), 8 - 48 (Xtal)	3 to 133 MHz	—	1.8 V	—	LVCMOS	TDFN6
Si51219	Pin	1/3	3 - 166 (Clock), 8 - 48 (Xtal)	3 to 200 MHz	—	2.5 to 3.3 V	1.8, 2.5, 3.3 V	LVCMOS	TSSOP8
Si5350A	Pin	1/3	25/27 (Xtal)	8 kHz to 160 MHz	100 ps	2.5, 3.3 V	1.8, 2.5, 3.3 V	LVCMOS	MSOP10
Si5350C	Pin	1/3	10 - 100 (Clock), 25/27 (Xtal)	8 kHz to 160 MHz	100 ps	2.5, 3.3 V	1.8, 2.5, 3.3 V	LVCMOS	MSOP10
Si5351A	I²C	1/3	25/27 (Xtal)	8 kHz to 160 MHz	100 ps	2.5, 3.3 V	1.8, 2.5, 3.3 V	LVCMOS	MSOP10

Any-Frequency, Any-Output CMOS Clocks

Silicon Labs' highly flexible factory and I²C programmable LVCMOS clock generators can be customized to generate multiple independent non-integer-related frequencies with equivalent frequency synthesis capability of 8 PLLs, with exact frequency synthesis (0 ppm error), significantly lower jitter, lower power and smaller size than competing solutions. Factory customization options are available to minimize EMI, including configurable edge rates, output impedance, output skew and spread spectrum.

Si5350 FEATURES

- Generates any frequency on any output, 8 kHz to 160 MHz
- Exact clock synthesis: 0 ppm error
- Similar frequency flexibility as 8 independent PLLs
- Crystal or clock input
- <100 ps pk-pk period jitter
- Glitchless switching between output frequencies
- I²C programmable or pin-controlled
- Excellent PSRR: no discrete components
- Two week sample lead time for any custom clock
- Integrated load capacitors
- Spread spectrum clock generation -0.1 to -2.5% down, ±0.1 to ±1.5% center
- User-definable control pins Powerdown, Output Enable, Spread Enable, Frequency Select control pins

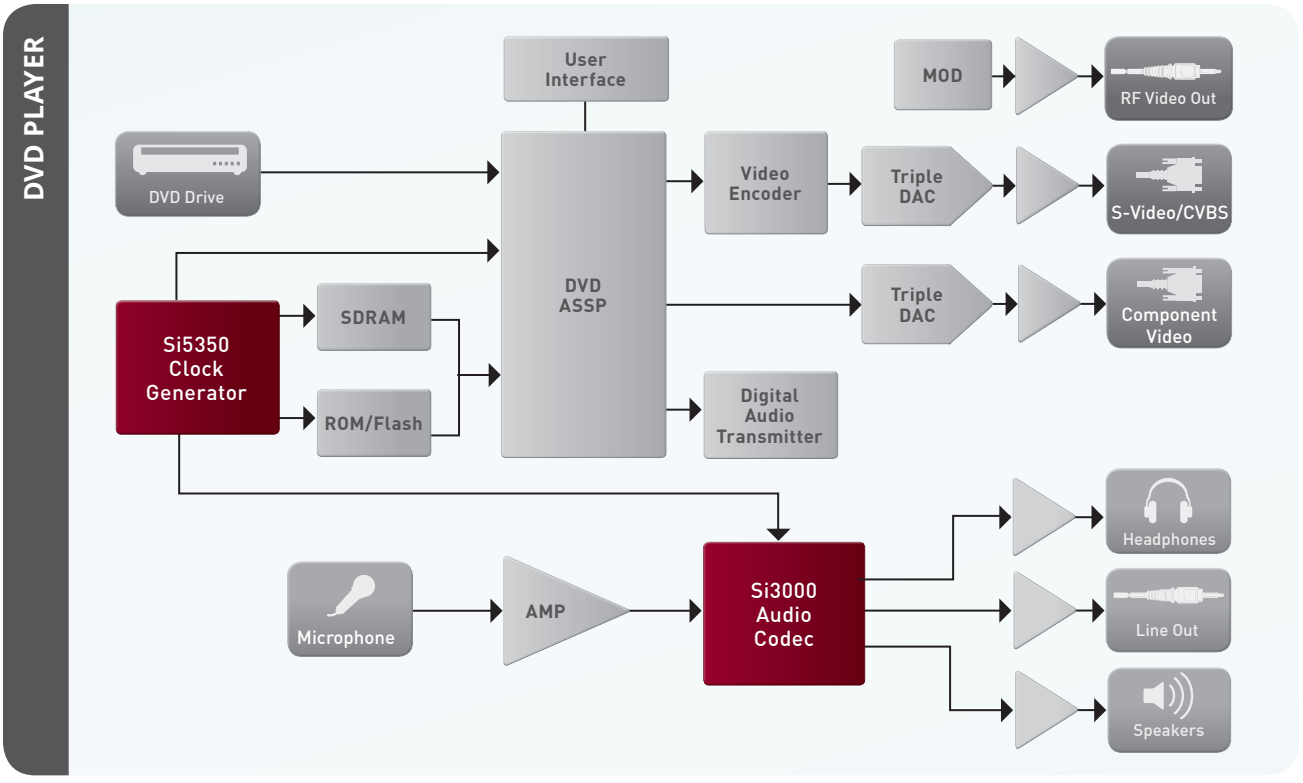

PART NUMBER	CONTROL	CLOCK INPUT/ OUTPUTS	INPUT FREQUENCY (MHz)	OUTPUT FREQUENCY (MHz)	PERIOD JITTER (PP)	VDD	VDDO	OUTPUT	PACKAGE
Si5350A/51A	Pin/I²C	1/8	25/27 (Xtal)	8 kHz - 160 MHz	100 ps	2.5, 3.3 V	1.8, 2.5, 3.3 V	LVCMOS	QFN20
Si5350B/51B	Pin/I²C	1/8	25/27 (Xtal)	8 kHz - 160 MHz	100 ps	2.5, 3.3 V	1.8, 2.5, 3.3 V	LVCMOS	QFN20
Si5350C/51C	Pin/I²C	1/8	10 - 100 (Clock), 25/27 (Xtal)	8 kHz - 160 MHz	100 ps	2.5, 3.3 V	1.8, 2.5, 3.3 V	LVCMOS	QFN20
Si5355	Pin	1/8	5 - 200 (Clock) 25/27 (Xtal)	1 - 200 MHz	50 ps	1.8, 2.5, 3.3 V	1.8, 2.5, 3.3 V	LVCMOS	QFN24

PCI Express Clock Generators (PCIe)

Silicon Labs offers the lowest power, highest performance PCI-Express clock generators in the market. All devices in the portfolio feature low power push-pull output buffer technology, providing benefits of low power consumption, reduced external terminating resistors and smaller packaging. To optimize performance, the devices support programmable drive strength, rise/fall times and output impedance. Basic HCSL PCIe and high-performance differential clocks and buffers are available. Support for down spread spectrum clock generation is also provided.

PCIe CLOCK FEATURES

- Full portfolio of PCI Express (PCIe) Gen 1/2/3 clocks and buffers
- All products utilize push-pull HCSL output buffers
- Fully integrated termination resistors on PCIe outputs
- Low power consumption
- Programmable spread spectrum
- Available hardware strapping pin for spread enable
- I²C/SMBus programmable
- Also supports LVPECL, LVDS, or CML levels
- Industrial temperature grade
- Individual output enable control
- Small form factor QFN packaging

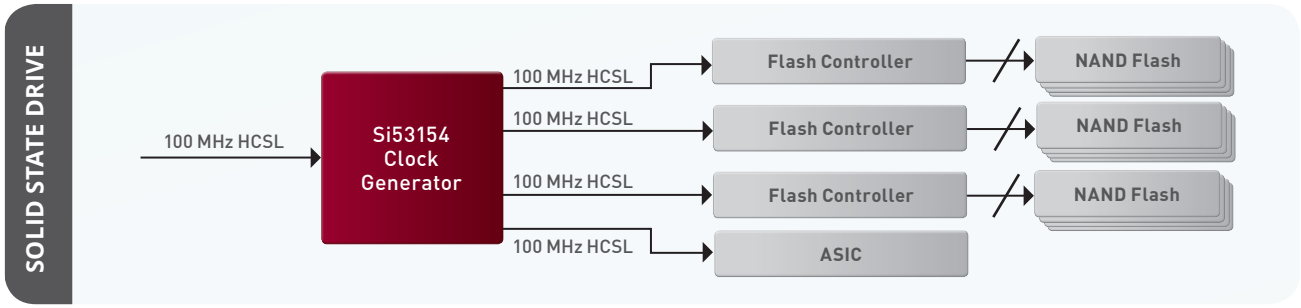

PART NUMBER	CONTROL	CLOCK INPUT/ OUTPUTS	INPUT FREQUENCY (MHz)	OUTPUT FREQUENCY (MHz)	PHASE JITTER (RMS)	VDD	VDDO	OUTPUT	PACKAGE
Si52142	Pin/I²C	1/3	25 MHz	100 MHz, 25 MHz	1.0 ps	3.3 V	3.3 V	HSCL, LVCMOS	QFN24
Si52143	Pin/I²C	1/5	25 MHz	100 MHz, 25 MHz	1.0 ps	3.3 V	3.3 V	HSCL, LVCMOS	QFN24
Si52144	Pin/I²C	1/4	25 MHz	100 MHz	1.0 ps	3.3 V	3.3 V	HSCL	QFN24
Si52146	Pin/I²C	1/6	25 MHz	100 MHz	1.0 ps	3.3 V	3.3 V	HSCL	QFN32
Si52147	Pin/I²C	1/9	25 MHz	100 MHz	1.0 ps	3.3 V	3.3 V	HSCL	QFN48
SL28SRC01	Pin	1/1	14.318 MHz	100 MHz	1.0 ps	3.3 V	3.3 V	HCSL	TSSOP16
SL28SRC02	Pin	1/2	14.318 MHz	100 MHz	1.0 ps	3.3 V	3.3 V	HCSL	TSSOP20
SL28SRC04	Pin	1/4	14.318 MHz	100 MHz	1.0 ps	3.3 V	3.3 V	HCSL	TSSOP24
Si5334	Pin	1/4	5 - 710 (Clock), 8 - 30 (Xtal)	0.16 - 710 MHz	1.0 ps	1.8, 2.5, 3.3 V	1.8, 2.5, 3.3 V	LVCMOS, LVDS, LVPECL, HCSL, SSTL, HSTL	QFN24
Si5335	Pin	1/4	10 - 350 (Clock), 25/27 (Xtal)	1 - 350 MHz	1.0 ps	1.8, 2.5, 3.3 V	1.8, 2.5, 3.3 V	LVCMOS, LVDS, LVPECL, HCSL, SSTL, HSTL, CML	QFN24
Si5338	I²C	1/4	5 - 710 (Clock) 8 - 30 (Xtal)	0.16 - 710 MHz	1.0 ps	1.8, 2.5, 3.3 V	1.8, 2.5, 3.3 V	LVPECL, LVDS, LVCMOS, HCSL, SSTL, HSTL	QFN24

CMOS Clock Generator + VCXOs

These integrated clock + VCXO devices feature an integrated voltage controlled oscillator (VCXO), while eliminating the need for custom, pullable crystals. Free-running and VCXO clocks can be generated by one device, making them ideal for cost-sensitive consumer applications.

Si5350B/51B FEATURES

- Generates any frequency on any output, 8 kHz to 160 MHz
- Exact clock synthesis: 0 ppm error
- Similar frequency flexibility as 8 independent PLLs
- Accepts crystal and analog control voltage input (VCXO)
- <100 ps pk-pk period jitter for any configuration
- Glitchless switching between output frequencies
- Integrated VCXO uses standard non-pullable crystal
- I²C programmable or pin-controlled
- Excellent PSRR: no discrete components
- Two week sample lead time for any custom clock
- Integrated load capacitors
- Spread spectrum clock generation
  -0.5 to -2.5% down, ±0.1 to ±1.5% center
- User-definable control pins Powerdown, Output Enable, Spread Enable or Frequency Select control pins

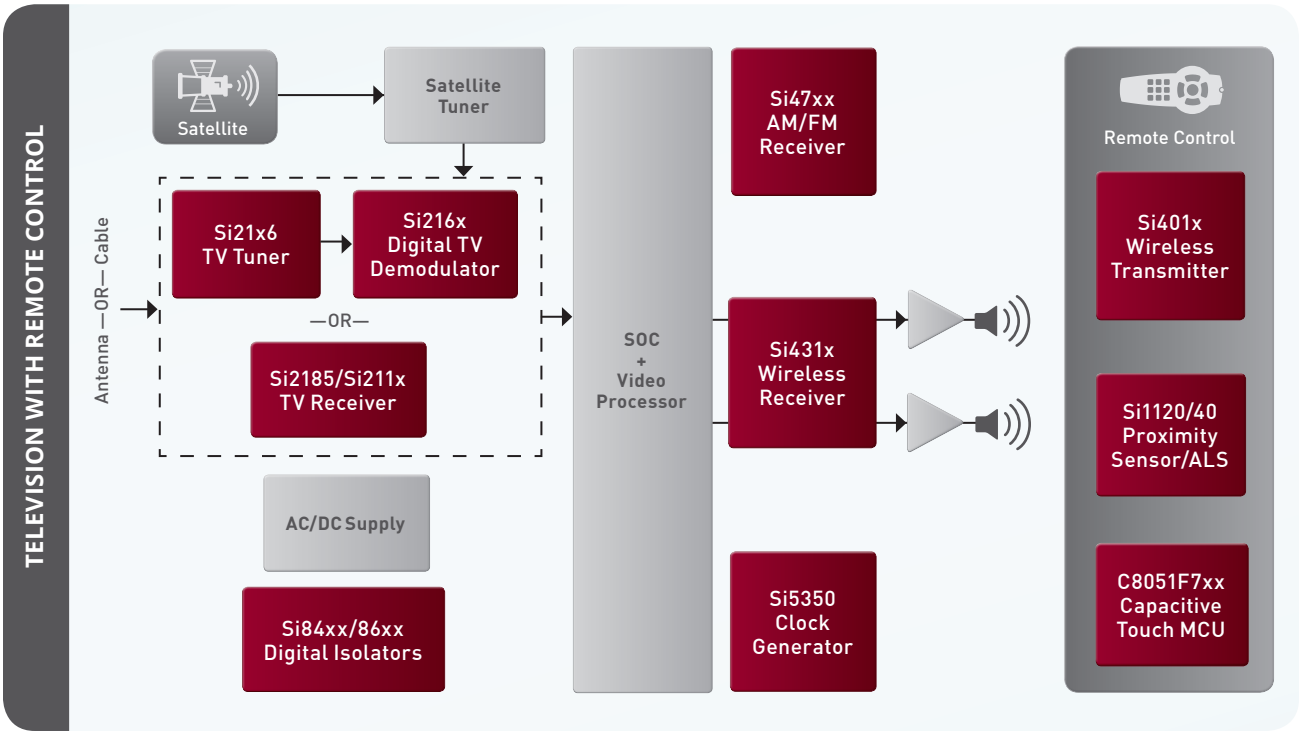

PART NUMBER	CONTROL	CLOCK INPUT/ OUTPUTS	INPUT FREQUENCY (MHz)	OUTPUT FREQUENCY (MHz)	PERIOD JITTER (PP)	VDD	VDDO	OUTPUT	PACKAGE
Si5350B	Pin	1/3 or 8	25/27 (Xtal) VCXO	8 kHz - 160 MHz	100 ps	2.5, 3.3 V	1.8, 2.5, 3.3 V	LVCMOS	MSOP10/QFN20
Si5351B	I²C	1/8	25/27 (Xtal) VCXO	8 kHz - 160 MHz	100 ps	2.5, 3.3 V	1.8, 2.5, 3.3 V	LVCMOS	QFN20
SL38000	Pin/I²C	1/12	3 - 166 (Clock), 8 - 48 (Xtal)	3 - 200 MHz	—	1.8, 2.5, 3.3 V	1.8, 2.5, 3.3 V	LVCMOS	TSSOP28
SL38160	Pin/I²C	1/8	3 - 166 (Clock), 8 - 48 (Xtal)	3 - 200 MHz	—	1.8, 2.5, 3.3 V	1.8, 2.5, 3.3 V	LVCMOS	TSSOP16

Embedded Intel x86 Clocks

Silicon Labs offers an family of Intel-compliant x86 clocks for embedded computing, communications and industrial applications. These system main clock generators support a wide variety of chipsets and processors. They provide all the necessary clock generation for the CPU, memory controller (chipset north bridge), I/O controller (chipset south bridge) as well as the latest timing requirements for industry standards such as SATA, USB, LAN, PCI Express and legacy PCI.

EMBEDDED INTEL x86 CLOCK FEATURES

- Clocking support for Intel processors
- Multi-PLL platform for independent, asynchronous signal generation
- Low power consumption push-pull differential buffers
- Available true differential current steering buffers
- Signal power management for notebook applications
- Dynamic enable/disable for PCIe hot plug applications
- Integrated voltage regulator and damping resistors on differential clocks
- Integrates external graphics clocking requirements
- Available center spread LCD clock for optimized display screen EMI reduction
- Integrated LAN clock for cost/space/component savings
- Integrated IEEE1394 clock for cost/space component savings
- 8-step programmable slew rate control for rise time and fall time control
- Dynamic independent PLL overclocking for enthusiast applications
- Underclocking capabilities for power management support and debugging
- Best in the industry pread pectrum technology for optimum system EMI reduction

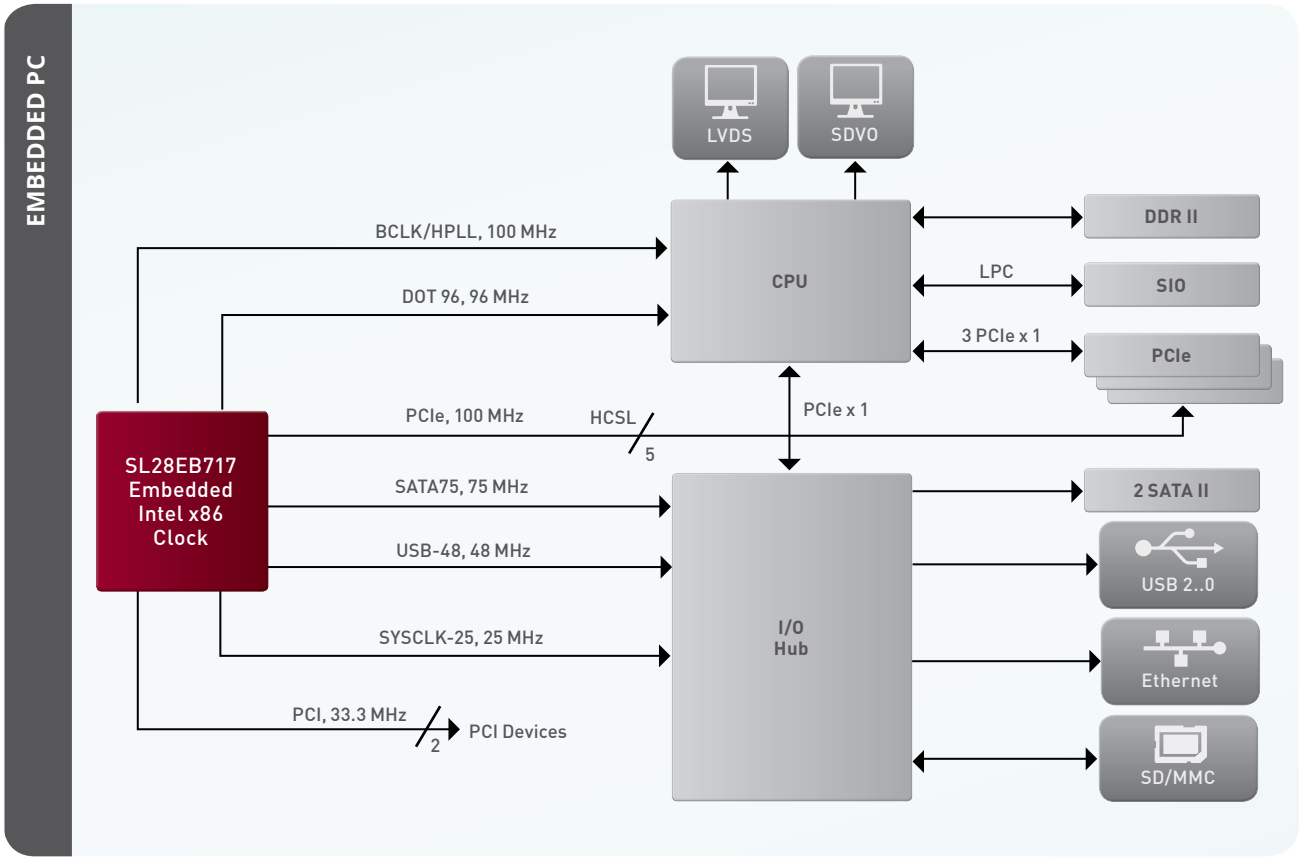

Embedded Intel x86 Clocks (cont.)

PART NUMBER	CONTROL	CLOCK INPUT/ OUTPUTS	INPUT FREQUENCY (MHz)	OUTPUT FREQUENCY (MHz)	VDD	VDDO	OUTPUT	PACKAGE
SL28EB636A								
SL28EB717	Pin/I^{2}C	1/13	25 MHz	12 MHz, 14.318 MHz, 25 MHz, 27 MHz, 33 MHz, 48 MHz, 75 MHz, 96 MHz, 83.33 MHz-166 MHz, 100 MHz	3.3 V	3.3 V	LVCMOS, HCSL	48QFN
SL28EB719	Pin/I^{2}C	1/13	25 MHz	12 MHz, 14.318 MHz, 25 MHz, 27 MHz, 33 MHz, 48 MHz, 75 MHz, 96 MHz, 83.33 MHz-166 MHz, 100 MHz	3.3 V	3.3 V	LVCMOS, HCSL	TSSOP48
SL28EB731A								
SL28EB740	Pin/I^{2}C	1/16	25 MHz	12 MHz, 14.318 MHz, 25 MHz, 33 MHz, 48 MHz, 75 MHz, 96 MHz, 83.33 MHz-166 MHz, 100 MHz	3.3 V	3.3 V	LVCMOS, HCSL	TSSOP56
SL28EB742	Pin/I^{2}C	1/16	14.318 MHz	14.3 MHz, 33 MHz, 48 MHz, 96 MHz, 100 MHz, 133 MHz, 166 MHz	3.3 V	3.3 V	LVCMOS, HCSL	QFN56
SL28EB742A								

EMI Reduction Clocks

Silicon Labs' programmable spread spectrum clock generators feature a wide range of programming options allowing system designers to minimize EMI at the application level. Configurable parameters include spread spectrum percentage/ modulation rate, programmable edge rates, programmable output impedance and programmable skew.

EMI REDUCTION CLOCK FEATURES

- Output frequencies from 1 to 200 MHz
- CLKOUT, REFCLK or SSCLK output options
- CLKIN or XO input options
- 8 to 48 MHz crystal input range
- 1 to 166 MHz clock input range
- Spread percent from 0 to 5.0%
- Down or center spread options
- Spread modulation frequency from 16 to 128 kHz
- On-chip programmable crystal capacitive load (C_L): 8 to 20 pF
- User-definable control pins Powerdown, Output Enable, Spread Enable, Frequency Select, Spread Select control pins
- 7 programmable tr/tf options
- Smallest SSCG clock on the market (TDFN6 1.2 mm x 1.4 mm)

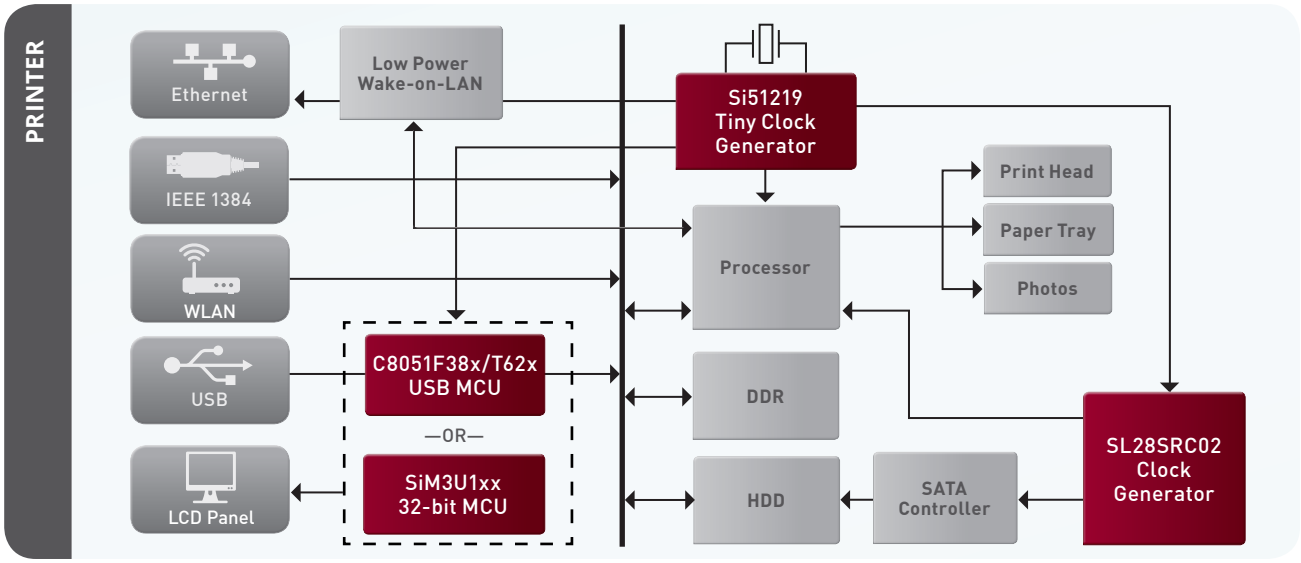

PART NUMBER	CONTROL	CLOCK INPUT/ OUTPUTS	INPUT FREQUENCY (MHz)	OUTPUT FREQUENCY (MHz)	PHASE JITTER (RMS)	VDD	VDDO	OUTPUT	PACKAGE
SL15300	Pin	1/4	3 - 166 (Clock), 8 - 48 (Xtal)	3 - 200 MHz	—	1.8, 2.5, 3.3 V	—	LVCMOS	TSSOP8
SL16020DC	Pin/I²C	1/2	27 (Xtal)	27 MHz, 100 MHz	—	3.3 V	—	LVCMOS	TDFN10
Si5335	Pin	1/4	10 - 350 (Clock), 25/27 (Xtal)	1 - 350 MHz	1.0 ps	1.8, 2.5, 3.3 V	1.8, 2.5, 3.3 V	LVCMOS, LVDS, LVPECL, HCSL, SSTL, HSTL, CML	QFN24
Si51210	Pin	1/2	3 - 166 (Clock), 8 - 48 (Xtal)	3 - 200 MHz	—	2.5 - 3.3 V	—	LVCMOS	TDFN6
Si51211	Pin	2/3	3 - 166 (Clock), 8 - 48 (Xtal)	3 - 200 MHz	—	2.5 - 3.3 V	1.8, 2.5, 3.3 V	LVCMOS	TDFN8
Si51214	Pin	1/2	3 - 166 (Clock), 8 - 48 (Xtal)	3 - 200 MHz	—	1.8 V	—	LVCMOS	TDFN6
Si51219	Pin	2/3	3 - 166 (Clock), 8 - 48 (Xtal)	3 - 200 MHz	—	2.5 - 3.3 V	1.8, 2.5, 3.3 V	LVCMOS	TSSOP8
Si52142	Pin/I²C	1/3	25 MHz	100 MHz, 25 MHz	1.0 ps	3.3 V	3.3 V	HSCL, LVCMOS	QFN24
Si52143	Pin/I²C	1/5	25 MHz	100 MHz, 25 MHz	1.0 ps	3.3 V	3.3 V	HSCL, LVCMOS	QFN24
Si52144	Pin/I²C	1/4	25 MHz	100 MHz	1.0 ps	3.3 V	3.3 V	HSCL	QFN24
Si52146	Pin/I²C	1/6	25 MHz	100 MHz	1.0 ps	3.3 V	3.3 V	HSCL	QFN32
Si52147	Pin/I²C	1/9	25 MHz	100 MHz	1.0 ps	3.3 V	3.3 V	HSCL	QFN48

Clock Distribution

WEB-CONFIGURABLE CUSTOM CLOCK BUFFERS AVAILABLE AT: www.silabs.com/ClockBuilder

Fanout Buffers/Level Translators

Silicon Labs' low jitter clock buffers produce multiple copies of an input clock at the same frequency with minimal additive jitter. LVDS, LVPECL, HCSL, CML, LVCMOS, SSTL and HSTL buffers are available, including devices that support multiple formats per device.

UNIVERSAL BUFFER FEATURES

- Wide operating frequency DC - 1.25 GHz
- 2-10 differential or 4-20 LVCMOS outputs
- Universal input stage accepts any differential or single-ended input
- Pin-selectable signal format per bank (LVPECL, Low Power LVPECL, LVDS, CML, HCSL, LVCMOS)
- Ultra-low additive jitter: 45 fs rms (12 kHz - 20 MHz)
- 2:1 mux with glitchless clock switching
- Synchronous output enable/Individual output enable
- Integrated voltage level translation
- Selectable LVCMOS drive strength to tailor jitter and EMI performance
- Optional output clock division: div-1, div-2, div-4
- Low output-output skew: <50 ps
- Excellent PSRR
- Independent VDD and VDDO: 1.8, 2.5 or 3.3 V

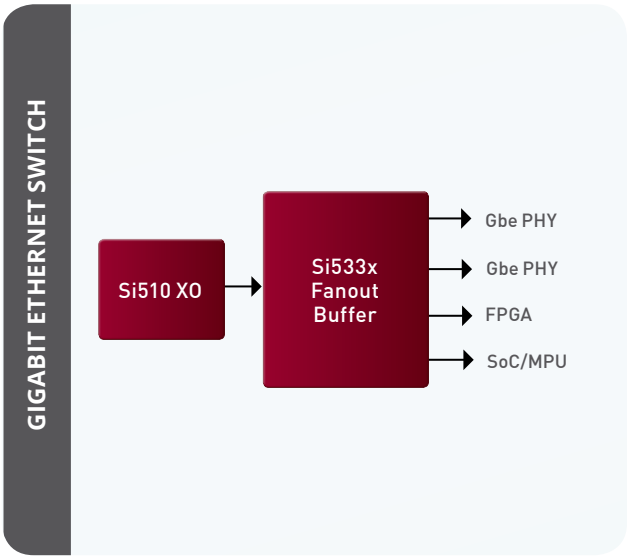

PART NUMBER	CONTROL	CLOCK INPUT/ OUTPUTS	ADDITIVE JITTER (RMS)	INPUT FREQUENCY (MHz)	OUTPUT FREQUENCY (MHz)	VDD	VDDO	OUTPUT	PACKAGE
Si53302	Pin	2/10	100 fs	1 - 725 MHz	1 - 725 MHz	1.8, 2.5, 3.3 V	1.8, 2.5 V	LVCMOS, LVDS, LVPECL, HCSL, CML	QFN44
Si53301	Pin	2/6	100 fs	1 - 725 MHz	1 - 725 MHz	1.8, 2.5, 3.3 V	1.8, 2.5 V	LVCMOS, LVDS, LVPECL, HCSL, CML	QFN44
Si53306									
Si53315	Pin	2/10	100 fs	1 - 1250 MHz	1 - 1250 MHz	1.8, 2.5, 3.3 V	1.8, 2.5 V	LVCMOS, LVDS, LVPECL, HCSL, CML	QFN44
Si53320	Pin	2/10	100 fs	1 - 725 MHz	1 - 725 MHz	2.5, 3.3 V	2.5, 3.3 V	LVPECL	TSSOP20
Si53360	Pin	1/8	100 fs	1 - 200 MHz	1 - 200 MHz	1.8, 2.5, 3.3 V	1.8, 2.5 V	LVCMOS	TSSOP16
Si53152	Pin/I²C	1/2	1.0 ps	100 MHz	100 MHz	3.3 V	3.3 V	HCSL	QFN24
Si53154	Pin/I²C	1/4	1.0 ps	100 MHz	100 MHz	3.3 V	3.3 V	HCSL	QFN24
Si53156	Pin/I²C	1/6	1.0 ps	100 MHz	100 MHz	3.3 V	3.3 V	HCSL	QFN32
Si53159	Pin/I²C	1/9	1.0 ps	100 MHz	100 MHz	3.3 V	3.3 V	HCSL	QFN48
SL2304NZ	Pin	1/4	—	1 - 140 MHz	1 - 140 MHz	3.3 V	—	LVCMOS	8TSSOP/8SOIC
SL23EP04NZ	Pin	1/4	—	DC - 220 MHz	DC - 220 MHz	2.5 V, 3.3 V	—	LVCMOS	TSSOP8
SL2305NZ	Pin	1/5	—	1 - 140 MHz	1 - 140 MHz	3.3 V	—	LVCMOS	TSSOP8/SOIC8
SL2309NZ	Pin	1/9	—	DC - 140 MHz	DC - 140 MHz	3.3 V	3.3 V	LVCMOS	SOIC16
SL23EP09NZ	Pin	1/9	—	1 - 220 MHz	1 - 220 MHz	2.5 V, 3.3 V	—	LVCMOS	TSSOP16/SOIC16
SL28PCIe14	Pin/I²C	2/4	1.0 ps	25 MHz/100 MHz	100 MHz	3.3 V	3.3 V	HCSL	QFN32
Si5330	Pin	1/4	150 fs	5 - 710 MHz	5 - 710 MHz	1.8, 2.5, 3.3 V	1.8, 2.5, 3.3 V	LVPECL, LVDS, HCSL, SSTL, HSTL	QFN24
Si5330F	Pin	1/8	—	5 - 200 MHz	5 - 200 MHz	1.8, 2.5, 3.3 V	1.8, 2.5, 3.3 V	LVCMOS	QFN24
Si5335	Pin	1/4	150 fs	1 - 350 MHz	1 - 350 MHz	1.8, 2.5, 3.3 V	1.8, 2.5, 3.3 V	LVCMOS, LVDS, LVPECL, HCSL, SSTL, HSTL,CML	QFN24
SL18860DC	Pin	1/3	—	10 - 52 MHz	10 - 52 MHz	1.8, 2.5, 3.3 V	—	LVCMOS	TDFN10

Zero Delay Buffers

Silicon Labs' zero delay clock buffers are used in applications that require zero propagation delay between the input and output clocks. Silicon Labs' zero delay buffers provide low power consumption and simplify the distribution of spread spectrum clocks.

ZERO DELAY BUFFER FEATURES

- Low propagation delay
- Low output-to-output skew
- Low device-to-device skew
- Low output jitter
- Drive strength options
- Wide operation frequency from 10 to 220 MHz
- 3.3 V to 2.5 V power supply range
- Low power dissipation

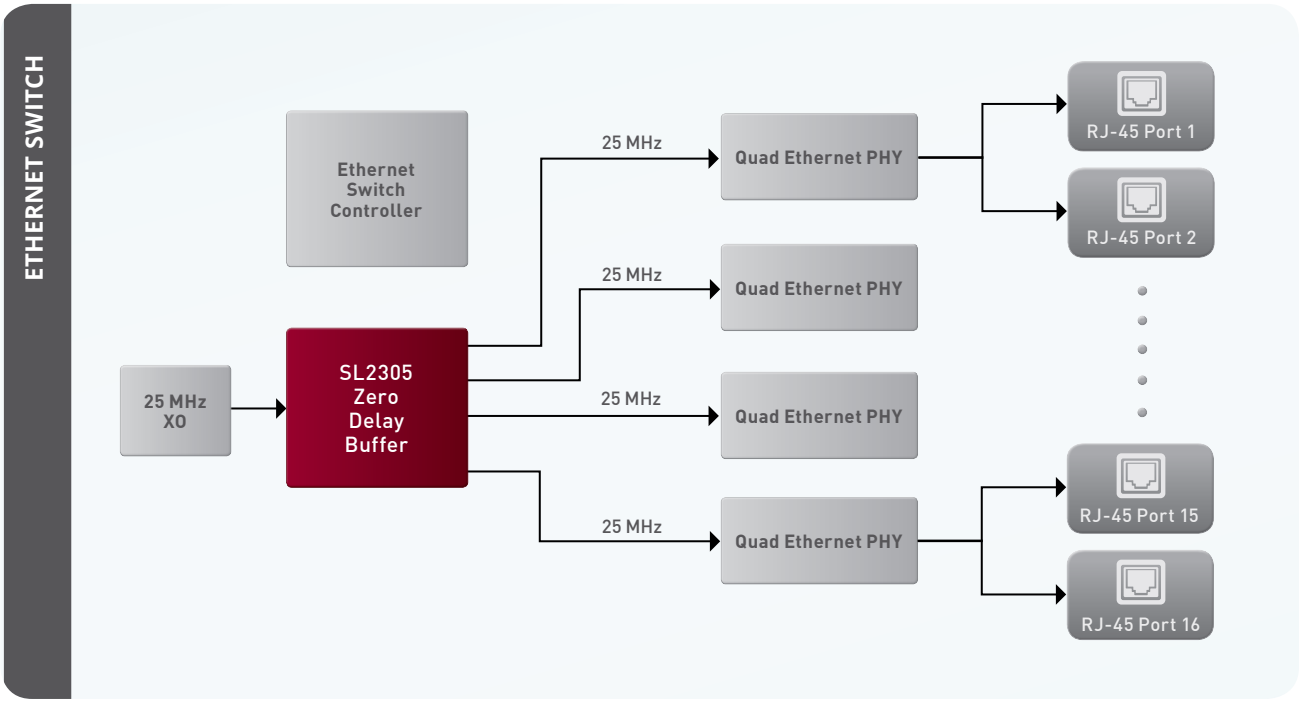

PART NUMBER	CONTROL	CLOCK INPUT/ OUTPUTS	INPUT FREQUENCY (MHz)	OUTPUT FREQUENCY (MHz)	PHASE JITTER (RMS)	VDD	VDDO	OUTPUT	PACKAGE
SL2305	Pin	1/5	1 - 140 MHz	1 - 140 MHz	—	3.3 V	—	LVCMOS	TSSOP8/SOIC8
SL2309	Pin	1/9	10 - 140 MHz	10 - 140 MHz	—	3.3 V	—	LVCMOS	TSSOP16/SOIC16
SL23EP04	Pin	1/4	10 - 220 MHz	10 - 220 MHz	—	2.5 V, 3.3 V	—	LVCMOS	SOIC8
SL23EP05	Pin	1/5	10 - 220 MHz	10 - 220 MHz	—	2.5 V, 3.3 V	—	LVCMOS	TSSOP8/SOIC8
SL23EP08	Pin	1/8	10 - 220 MHz	10 - 220 MHz	—	2.5 V, 3.3 V	—	LVCMOS	TSSOP16/SOIC16
SL23EP09	Pin	1/9	10 - 220 MHz	10 - 220 MHz	—	2.5 V, 3.3 V	—	LVCMOS	TSSOP16/SOIC16

PCI Express Clock Buffers (PCIe)

Silicon Labs offers the lowest power, highest performance PCI-Express clock generators in the market. All devices in the portfolio feature low power push-pull output buffer technology, providing benefits of low power consumption, reduced external terminating resistors and smaller packaging. To optimize performance, the devices support programmable drive strength, rise/fall times and output impedance. Basic HCSL PCIe and high-performance differential clocks and buffers are available. Support for down spread spectrum clock generation is also provided.

PCIe CLOCK FEATURES

- Full portfolio of PCI Express (PCIe) Gen 1/2/3 clocks and buffers
- All products utilize push-pull HCSL output buffers
- Fully integrated termination resistors on PCIe outputs
- Low power consumption
- Programmable spread spectrum
- Available hardware strapping pin for spread enable
- I²C/SMBus programmable
- Also supports LVPECL, LVDS, or CML levels
- Industrial temperature grade
- Individual output enable control
- Small form factor QFN packaging

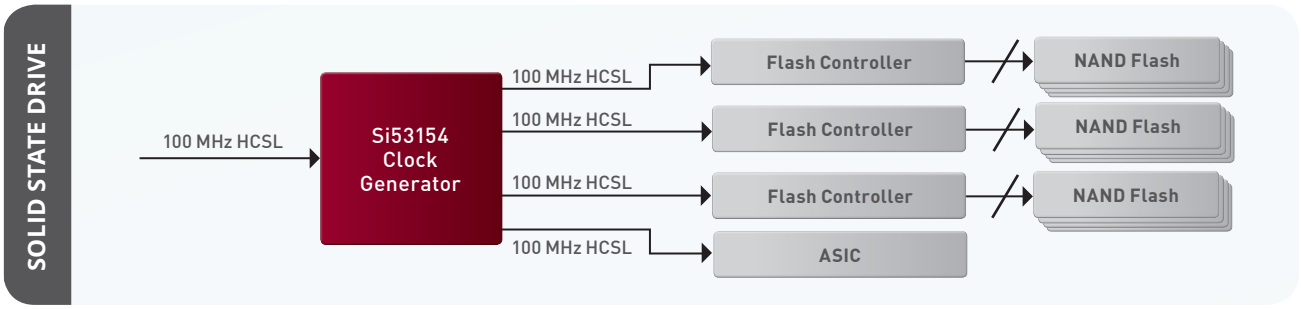

PART NUMBER	CONTROL	CLOCK INPUT/ OUTPUTS	INPUT FREQUENCY (MHz)	OUTPUT FREQUENCY (MHz)	PHASE JITTER (RMS)	VDD	VDDO	OUTPUT	PACKAGE
Si53102	—	1/2	100 MHz	100 MHz	0.5 ps	2.5, 3.3 V	—	HSCL	TDFN8
Si53154	Pin/I²C	1/4	100 MHz	100 MHz	1.0 ps	3.3 V	3.3 V	HSCL	QFN24
Si53156	Pin/I²C	1/6	100 MHz	100 MHz	1.0 ps	3.3 V	3.3 V	HSCL	QFN32
Si53159	Pin/I²C	1/9	100 MHz	100 MHz	1.0 ps	3.3 V	3.3 V	HSCL	QFN48
CY28400-2	Pin/I²C	1/4	100 MHz	100 MHz	—	3.3 V	3.3 V	HCSL	SSOP28/TSSOP28
CY28800	Pin/I²C	1/8	100 MHz	100 MHz	—	3.3 V	3.3 V	HCSL	SSOP48

Jitter Attenuators/Clock Cleaners

REQUEST SAMPLES AND DOWNLOAD DOCUMENTATION AT: www.silabs.com/clocks

Silicon Labs' precision clocks generate any output frequency from any input frequency while providing jitter attenuation and clock distribution in high-performance timing applications requiring sub 0.5 ps jitter performance. The devices accept multiple clock inputs ranging from 2 kHz to 710 MHz and generate multiple low jitter, independent, synchronous clock outputs ranging from 2 kHz to 945 MHz and select frequencies to 1.4 GHz. The precision clocks are based on Silicon Labs' proven third-generation DSPLL® technology, which generates any output frequency from any input frequency with 300 fs rms jitter performance in a highly integrated PLL solution that eliminates the need for external VCXO and loop filter components.

JITTER ATTENUATOR FEATURES

- Generates any output frequency from any input frequency
- Ultra-low jitter: 290 fs RMS
- 1-DSPLL and 4-DSPLL versions available
- Integrated loop filter with selectable loop bandwidth
- Hitless switching with phase buildout (auto/manual)
- Freerun or synchronous operating modes
- Best-in-class PSRR
- I²C/SPI or pin-controlled
- User-selectable output clock signal format (LVPECL, LVDS, CML, CMOS)
- Single supply: 1.8, 2.5 or 3.3 V ±10% operation
- Easy-to-use DSPLLsim* configuration software

*see page 16 for more about our DSPLLsim software

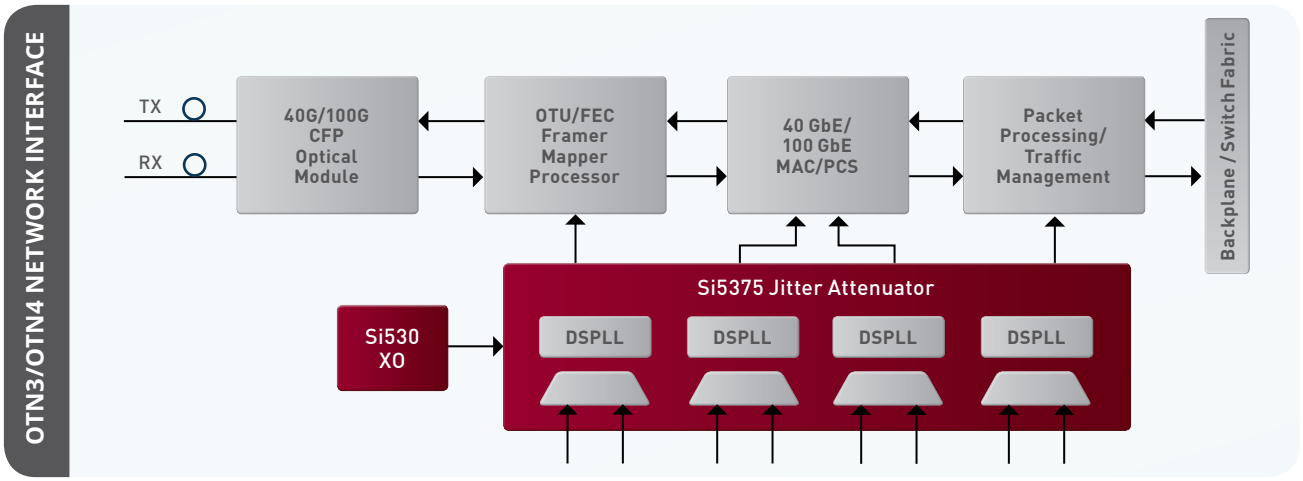

PART NUMBER	# OF PLLS	CONTROL	CLOCK INPUTS/ OUTPUTS	INPUT FREQUENCY (MHz)	OUTPUT FREQUENCY (MHz)	JITTER (12 KHz TO 20 MHz)	PLL BANDWIDTH	HITLESS SWITCHING	DIGITAL HOLD	FREE RUN	SIGNAL FORMAT	PACKAGE
Si5315	1	Pin	2/2	0.008 - 644	0.008 - 644	450 fs rms typ	60 Hz - 8 kHz	•	•		CMOS, LVDS, LVPECL, CML	QFN36
Si5317	1	Pin	1/2	1 - 710	1 - 710	290 fs rms typ	60 Hz - 8 kHz		•			QFN36
Si5319	1	I²C/SPI	1/1	0.002 - 710	0.002 - 1417	300 fs rms typ	60 Hz - 8 kHz			•		QFN36
Si5324	1	I²C/SPI	2/2	0.002 - 710	0.002 - 1417	290 fs rms typ	4 Hz - 525 Hz	•	•	•		QFN36
Si5326	1	I²C/SPI	2/2	0.002 - 710	0.002 - 1417	300 fs rms typ	60 Hz - 8 kHz	•	•	•		QFN36
Si5327	1	I²C/SPI	2/2	0.002 - 710	0.002 - 808	500 fs rms typ	4 Hz - 525 Hz	•	•	•		QFN36
Si5368	1	I²C/SPI	4/5	0.002 - 710	0.002 - 1417	300 fs rms typ	60 Hz - 8 kHz	•	•	•		TQFP100
Si5369	1	I²C/SPI	4/5	0.002 - 710	0.002 - 1417	300 fs rms typ	4 Hz - 525 Hz	•	•	•		TQFP100
Si5374	4	I²C	8/8	0.002 - 710	0.002 - 808	410 fs rms typ	4 Hz - 525 Hz	•	•	•		BGA80
Si5375	4	I²C	4/4	0.002 - 710	0.002 - 808	410 fs rms typ	60 Hz - 8 kHz		•	•		BGA80
Si5376	4	I²C	8/8	0.002 - 710	0.002 - 808	410 fs rms typ	60 Hz - 8 kHz	•	•	•		BGA80

Synchronous Ethernet Clock

REQUEST SAMPLES AND DOWNLOAD DOCUMENTATION AT: www.silabs.com/synce

SyncE is used to distribute accurate timing in GbE, 10 GbE, 40 GbE and 100 GbE Carrier Ethernet systems. Every Carrier Ethernet switch/router requires a high-performance SyncE clock to distribute timing and provide a low jitter Ethernet PHY reference clock. The Si5328 is the industry's lowest jitter, fully compliant SyncE clock, making it ideal for Ethernet PHYs from GbE to 100 GbE. Operating from a single 2.5 or 3.3 V supply, the Si5328 is ideal for providing clock multiplication, wander filtering and jitter attenuation, in high-performance Synchronous Ethernet-enabled switches and routers.

SYNCE CLOCK FEATURES

- Fully compliant with SyncE clock requirements (ITU G.8262)
- Generates any output frequency (8 kHz to 808 MHz) from any input frequency (8 kHz to 710 MHz)
- Dual clock outputs with 0.3 ps RMS jitter and any signal format (LVDS, LVPECL, CML, CMOS)
- Integrated loop filter with selectable loop bandwidths: 0.1 Hz; 1 to 10 Hz
- Compact factor 6 mm x 6 mm QFN
- Reprogrammable to any frequency without BOM changes

SYNCE SWITCH/ROUTER

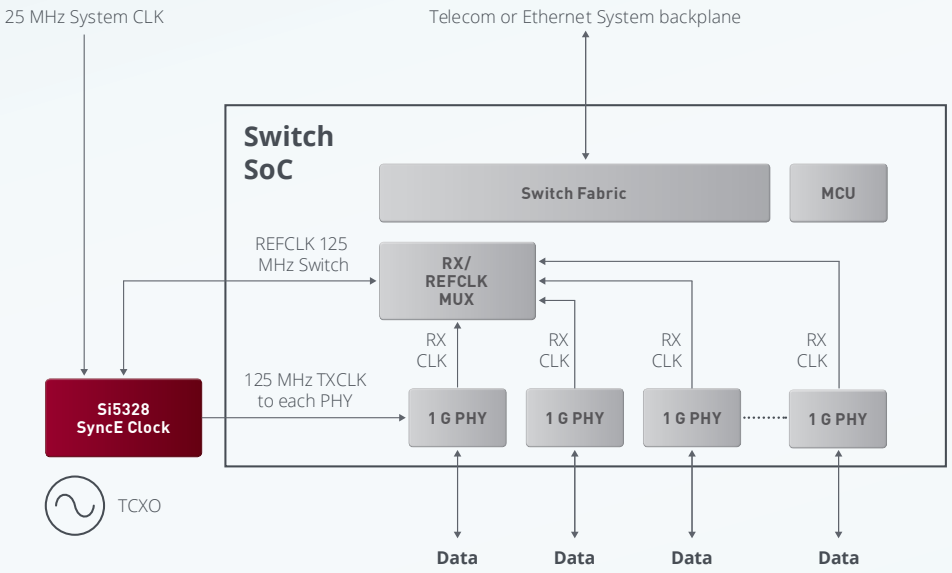

PART NUMBER	# OF INPUTS	INPUT CLOCK FREQUENCY RANGE	# OUTPUT CLOCKS	OUTPUT CLOCK FREQUENCY RANGE	PHASE JITTER (RMS TYP)	EEC OPTION 1 AND 2 WANDER FILTERING	PACKAGE
Si5328B	2	8 kHz - 710 MHz	2	8 kHz - 808 MHz	0.3 ps	Yes	
Si5328C	2	8 kHz - 346 MHz	2	8 kHz - 346 MHz	0.3 ps	Yes	

XOs/VCXOs

REQUEST CUSTOM PART NUMBERS AND SAMPLES AT: www.silabs.com/VCXOpartnumber

Silicon Labs' crystal oscillators and voltage controlled crystal oscillators (XO/VCXOs) leverage advanced DSPLL® circuitry to provide a low jitter clock at any frequency from 100 kHz to 1.4 GHz. Unlike a traditional XO, where a different crystal is required for each output frequency, Silicon Labs' XO/VCXOs use one fixed frequency crystal to provide a wide range of output frequencies. This IC-based approach allows the crystal resonator to provide exceptional frequency stability and reliability, while providing best-in-class jitter performance and supply noise rejection, simplifying the task of generating low jitter clocks in noisy environments. All devices are factory configurable for a wide variety of user specifications including frequency, supply voltage, output format and stability, thereby eliminating long lead times associated with custom oscillators.

XO/VCXO FEATURES

- Wide frequency range: 100 kHz to 1.4 GHz
- Samples of any XO/VCXO available in 2 weeks
- Superior jitter performance: <0.3 ps rms
- Excellent frequency stability with superior initial accuracy
- Single, dual, quad and I²C programmable configurations
- LVPECL, LVDS, CML, HCSL and CMOS options
- 1.8, 2.5, or 3.3 V options
- Industry standard, ROHS-compliant 5 x 7 mm and 3.2 x 5 mm packages and pinouts
- Industrial temperature range: -40 to 85 °C

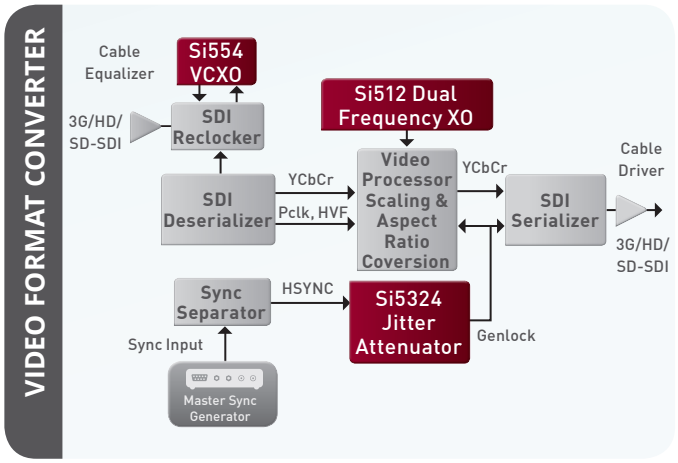

Fixed Frequency XO/VCXOs

PART NUMBER	TYPE	FREQUENCY	FREQUENCY RANGE	RMS PHASE JITTER	STABILITY/APR (PPM)	OUTPUT FORMAT	PACKAGE
Si510/1	XO	Single	0.1 - 250 MHz	0.8 ps	±30, ±50, ±100	LVPECL, LVDS, HCSL, Dual CMOS, LVCMOS,	5 mm x 7 mm and 3.2 mm x 5 mm 6-pad
Si512/3	XO	Dual		0.8 ps			
Si515	VCXO	Single		1.0 ps	±30 to ±100		
Si516	VCXO	Dual		1.0 ps			
Si530/1	XO	Single	10 - 1417 MHz	0.3 ps	±20, ±31.5, ±61.5	LVPECL, LVDS, CML, LVCMOS	5 x 7 mm 6-pad
Si532/3	XO	Dual		0.3 ps			5 x 7 mm 6-pad
Si534	XO	Quad		0.3 ps			5 x 7 mm 8-pad
Si550	VCXO	Single	10 - 1417 MHz	0.5 ps	±12 to ±375		5 x 7 mm 6-pad
Si552	VCXO	Dual		0.5 ps			5 x 7 mm 6-pad
Si554	VCXO	Quad		0.5 ps			5 x 7 mm 8-pad
Si590/1	XO	Single	10 - 810 MHz	0.5 ps	±20, ±30, ±50, ±100		5 x 7 mm 6-pad
Si595	VCXO	Single		0.7 ps	±10 to ±370		5 x 7 mm 6-pad
Si597	VCXO	Quad		0.7 ps			5 x 7 mm 8-pad

I²C Programmable XO/VCXOs

PART NUMBER	TYPE	FREQUENCY RANGE	TUNING RESOLUTION	RMS PHASE JITTER	STABILITY/APR (PPM)	OUTPUT FORMAT	SUPPLY VOLTAGE (V)	PACKAGE
Si514	XO	0.1 - 250 MHz	26 PPT	0.8 ps	±30, ±50, ±100	HCSL, LVPECL, LVDS, LVCMOS, Dual CMOS,	1.8, 2.5, 3.3 V	5 x 7 mm/ 3.2 x 5 mm 6-pad
Si570	XO	10 - 1417 MHz	80 PPT	0.3 ps	±20, ±31.5, ±62.5	LVPECL, LVDS, CML, LVCMOS	1.8, 2.5, 3.3 V	5 x 7 mm 8-pad
Si571	VCXO			0.5 ps	±12 to ±375			5 x 7 mm 8-pad
Si598	XO	10 - 810 MHz	28 PPT	0.5 ps	±30, ±50, ±100	LVPECL, LVDS, CML, LVCMOS	1.8, 2.5, 3.3 V	5 x 7 mm 8-pad
Si599	VCXO			0.7 ps	±10 to ±370			5 x 7 mm 8-pad

Hardware and Software Support

FULL DOCUMENTATION, SOFTWARE AND APPLICATION NOTES ARE AVAILABLE AT: www.silabs.com/timing

Clock and Oscillator Development Kits

Silicon Labs offers complete tools to help designers throughout the entire development process. Both clock and oscillator solutions offer hardware and software platforms to easily set up, configure and evaluate overall device performance.

Custom Clock Generator Configurator

The ClockBuilder Desktop software allows you to configure a custom clock and generate the NVM file the factory needs in order to manufacture the custom part.

Configuration and control of Silicon Labs clock generators is mainly handled through the I²C/SMBus interface. The device also provides the option of storing a user-definable clock configuration in its non-volatile memory (NVM), which becomes the default clock configuration at power-up. Changes to the default configuration can always be made through the I²C interface.

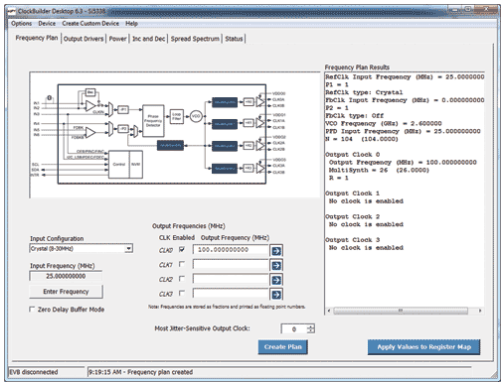

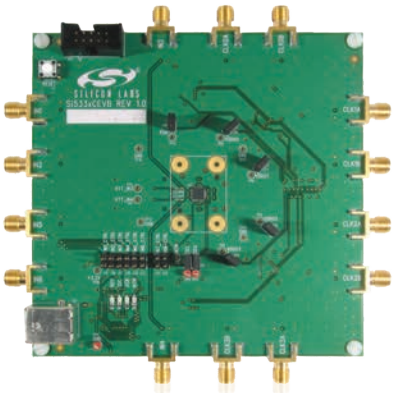

Si5338 CLOCK GENERATION EVALUATION BOARD

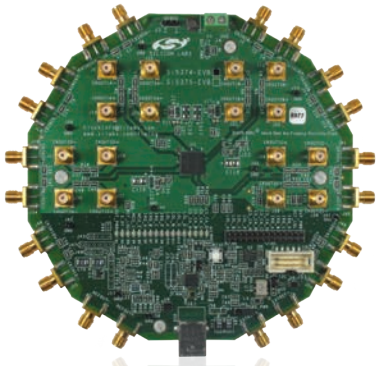

Si5374/5/6 JITTER ATTENUATING CLOCK EVALUATION BOARD

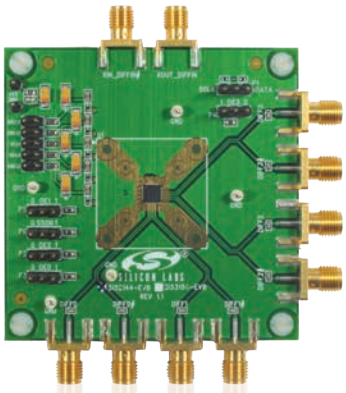

Si52144 PCI EXPRESS EVALUATION BOARD

Silicon Labs Makes Finding the Right Part Easy!

QUICKLY BUY OR SAMPLE PRODUCTS ON OUR WEBSITE AT www.silabs.com/custom-timing

Clock and Oscillator Design Services

Silicon Labs offers the industry's broadest portfolio of embedded clocks and oscillators for communications, computing, broadcast video and consumer applications with the shortest lead times in the industry, with no minimum order quantities or NRE fees. Silicon Labs also provides a comprehensive clock tree design service to simplify component selection. Propsals are generated within three business days.



Parametric Search iPad App

Take the parametric search mobile! The Silicon Labs Parametric Search iPad app makes it easy to find exactly what you need for your next embedded design. Quickly jump between microcontroller, clock, oscillator, digital isolator, and isolated gate driver product families. Filter results using common technical and application requirements. Access data sheets and other documentation directly in the app and download to iBooks for offline access. Browse detailed product information – features, applications, block diagrams and even order samples and development kits, all from within the app. Offline access available—refresh data the next time you're connected to the Internet. www.silabs.com/parametric-search



Available on the App Store

Industry's Shortest Lead Times

Low-jitter, high-performance, custom samples are available overnight, and to help you get to market faster, production quantities ship in less than 2–4 weeks. Silicon Labs' complete portfolio of industry-leading XOs, VCXOs, clock generators, jitter attenuating clocks and clock buffers set a new standard for flexibility, performance and lead time.

2 WEEK LEAD TIMES

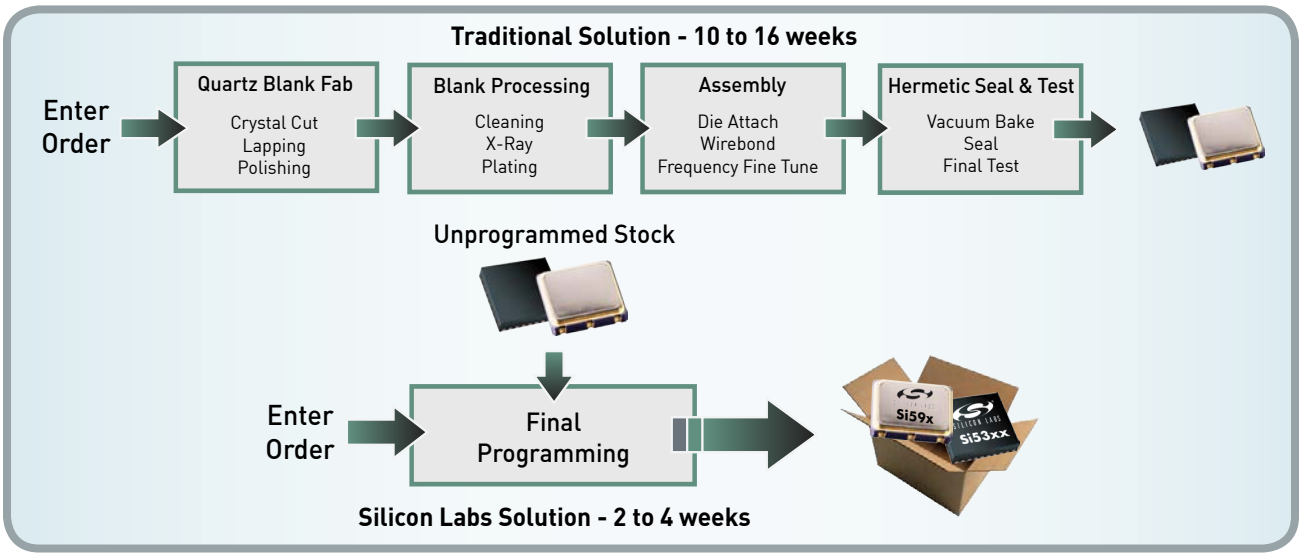

Silicon Labs' products are designed and manufactured to ISO 9001, ISO 14001 and ISO/TS 16949 standards.

ISO 9001

Quality Management System
Design and Manufacture of Integrated Circuits
Certificate Registration No: 951 08 4762

ISO 14001

Environmental Management System
Design and Manufacture of Integrated Circuits
Certificate Registration No: 951 09 4998

ISO/TS 16949

Quality Management System for
Manufacture of Integrated Circuits and Related Products for Automotive Applications
Certificate Registration No.: 12 111 33114 TMS
IATF Certificate No.: 0080212

Mixed Sources

Product group from well-managed forests, controlled sources and recycled wood or fiber

www.fsc.org Cert no. SW-COC-001730

© 1996 Forest Stewardship Council

© 2014, Silicon Laboratories Inc. ClockBuilder, DSPLL, MultiSynth, Silicon Labs and the Silicon Labs logo are trademarks or registered trademarks of Silicon Laboratories Inc. All other product or service names are the property of their respective owners. For the most up to date information please see your sales representative or visit our website at www.silabs.com.

WEB, June 2014, Rev I SEL-CLK

SILICON LABS | 400 W. CESAR CHAVEZ | AUSTIN, TX 78701 | USA | +1 (512) 416-8500 | SILABS.COM