Si52146

PCI-EXPRESS GEN 1, GEN 2, & GEN 3 SIX OUTPUT CLOCK GENERATOR

Features

- PCI-Express Gen 1, Gen 2, & Gen 3 compliant
- Low power push-pull type differential output buffers
- Integrated resistors on differential clocks
- Dedicated output enable pin for each clock
- Hardware selectable spread control
- Six PCI-Express clocks
- 25 MHz crystal input or clock input
- I^2C support with readback capabilities
- Triangular spread spectrum profile for maximum electromagnetic interference (EMI) reduction
- Industrial temperature: –40 to 85 °C
- 3.3 V Power supply
- 32-pin QFN package



Ordering Information:
See page 18

Applications

- Network attached storage
- Multi-function printer
- Wireless access point
- Routers

Description

The Si52146 is a spread-controlled PCIe clock generator that can source six PCIe clocks simultaneously. The device has six hardware inputs for enabling the respective outputs on the fly while powered on along with the spread control hardware pin to enable Spread for EMI reduction.

Functional Block Diagram

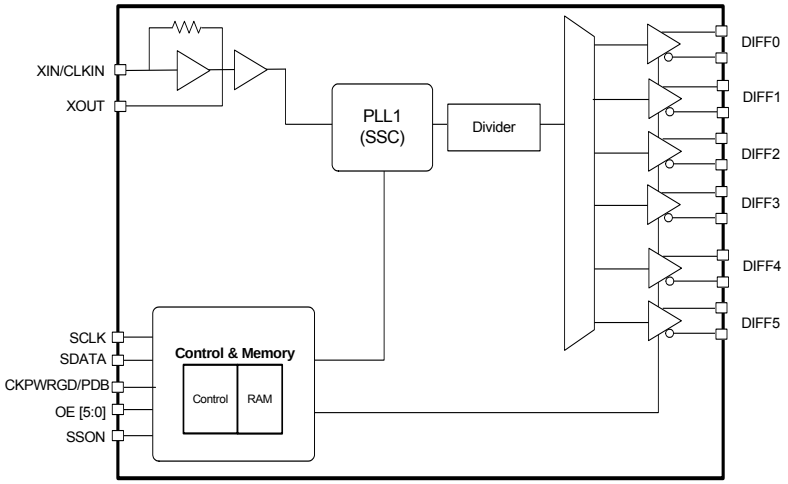

Pin Assignments

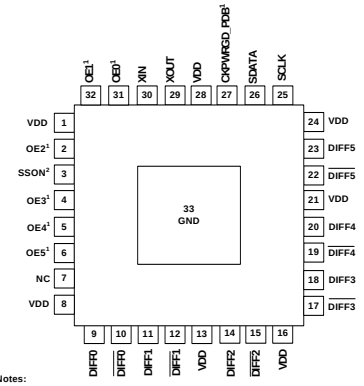

Notes:
1. Internal 100 kohm pull-up.
2. Internal 100 kohm pull-down.

Patents pending

Copyright © 2011 by Silicon Laboratories

This information applies to a product under development. Its characteristics and specifications are subject to change without notice.

TABLE OF CONTENTS

Section **Page**

1. Electrical Specifications 4
2. Functional Description 7
2.1. Crystal Recommendations 7
2.2. CKPWRGD_PDB (Power down) Clarification 8
2.3. PDB (Power down) Assertion 8
2.4. PDB Deassertion 8
2.5. OE Clarification 8
2.6. OE Assertion 8
2.7. OE Deassertion 8
2.8. SSON Clarification 8
3. Test and Measurement Setup 9
4. Control Registers 11
4.1. Serial Data Interface 11
4.2. Data Protocol 11
5. Pin Descriptions: 32-Pin QFN 16
6. Ordering Guide 18
7. Package Outline 19
Contact Information 20

1. Electrical Specifications

Table 1. DC Electrical Specifications

Parameter	Symbol	Test Condition	Min	Typ	Max	Unit
3.3 V Operating Voltage	VDD core	3.3 ±5%	3.135	3.3	3.465	V
3.3 V Input High Voltage	V_{IH}	Control input pins	2.0	—	V_{DD} + 0.3	V
3.3 V Input Low Voltage	V_{IL}	Control input pins	V_{SS} – 0.3	—	0.8	V
Input High Voltage	V_{IHI2C}	SDATA, SCLK	2.2	—	—	V
Input Low Voltage	V_{ILI2C}	SDATA, SCLK	—	—	1.0	V
Input High Leakage Current	I_{IH}	Except internal pull-down resistors, $0 < V_{IN} < V_{DD}$	—	—	5	µA
Input Low Leakage Current	I_{IL}	Except internal pull-up resistors, $0 < V_{IN} < V_{DD}$	–5	—	—	µA
3.3 V Output High Voltage (SE)	V_{OH}	I_{OH} = –1 mA	2.4	—	—	V
3.3 V Output Low Voltage (SE)	V_{OL}	I_{OL} = 1 mA	—	—	0.4	V
High-impedance Output Current	I_{OZ}		–10	—	10	µA
Input Pin Capacitance	C_{IN}		1.5	—	5	pF
Output Pin Capacitance	C_{OUT}		—	—	6	pF
Pin Inductance	L_{IN}		—	—	7	nH
Power Down Current	I_{DD_PD}		—	—	1	mA
Dynamic Supply Current	$I_{DD_3.3V}$	All outputs enabled. Differential clocks with 5” traces and 2 pF load.	—	—	60	mA

Table 2. AC Electrical Specifications

Parameter	Symbol	Condition	Min	Typ	Max	Unit
Crystal						
Long-term Accuracy	L_{ACC}	Measured at $V_{DD}/2$ differential	—	—	250	ppm
Clock Input						
CLKIN Duty Cycle	T_{DC}	Measured at $V_{DD}/2$	47	—	53	%
CLKIN Rise and Fall Times	T_R/T_F	Measured between 0.2 V_{DD} and 0.8 V_{DD}	0.5	—	4.0	V/ns
CLKIN Cycle to Cycle Jitter	T_{CCJ}	Measured at VDD/2	—	—	250	ps
CLKIN Long Term Jitter	T_{LTJ}	Measured at VDD/2	—	—	350	ps
Input High Voltage	V_{IH}	XIN/CLKIN pin	2	—	VDD+0.3	V
Input Low Voltage	V_{IL}	XIN/CLKIN pin	—	—	0.8	V
Input High Current	I_{IH}	XIN/CLKIN pin, VIN = VDD	—	—	35	uA
Input Low Current	I_{IL}	XIN/CLKIN pin, 0 < VIN <0.8	–35	—	—	uA
DIFF at 0.7 V						
DIFF Duty Cycle	T_{DC}	Measured at 0 V differential	45	—	55	%
Any DIFF Clock Skew from the Earliest Bank to the Latest Bank	$T_{SKEW(window)}$	Measured at 0 V differential	—	—	50	ps
DIFF Cycle to Cycle Jitter	T_{CCJ}	Measured at 0 V differential	—	35	50	ps
Output PCIe Gen1 REFCLK Phase Jitter	RMS_{GEN1}	Includes PLL BW 1.5–22 MHz, ζ = 0.54, Td=10 ns, Ftrk=1.5 MHz with BER = 1E-12	0	40	108	ps
Output PCIe Gen2 REFCLK Phase Jitter	RMS_{GEN2}	Includes PLL BW 8–16 MHz, Jitter Peaking = 3 dB, ζ = 0.54, Td=12 ns), Low Band, F < 1.5 MHz	0	2	3.0	ps
Output PCIe Gen2 REFCLK Phase Jitter	RMS_{GEN2}	Includes PLL BW 8–16 MHz, Jitter Peaking = 3 dB, ζ = 0.54, Td=12 ns), High Band, 1.5 MHz < F < Nyquist	0	2	3.1	ps
Output Phase Jitter Impact—PCIe Gen3	RMS_{GEN3}	Includes PLL BW 2–4 MHz, CDR = 10 MHz)	0	0.5	1.0	ps
DIFF Long Term Accuracy	L_{ACC}	Measured at 0 V differential	—	—	100	ppm
DIFF Rising/Falling Slew Rate	T_R/T_F	Measured differentially from ±150 mV	1	—	8	V/ns
Voltage High	V_{HIGH}		—	—	1.15	V
Voltage Low	V_{LOW}		–0.3	—	—	V
Crossing Point Voltage at 0.7 V Swing	V_{OX}		300	—	550	mV
Enable/Disable and Setup						
Clock Stabilization from Power-up	T_{STABLE}		—	—	1.8	ms
Stopclock Set-up Time	T_{SS}		10.0	—	—	ns

Table 3. Absolute Maximum Conditions

Parameter	Symbol	Condition	Min	Typ	Max	Unit
Main Supply Voltage	$V_{DD_3.3V}$	Functional	—	—	4.6	V
Input Voltage	V_{IN}	Relative to V_{SS}	–0.5	—	4.6	V_{DC}
Temperature, Storage	T_S	Non-functional	–65	—	150	°C
Temperature, Operating Ambient	T_A	Functional	–40	—	85	°C
Temperature, Junction	T_J	Functional	—	—	150	°C
Dissipation, Junction to Case	$Ø_{JC}$	JEDEC (JESD 51)	—	—	17	°C/W
Dissipation, Junction to Ambient	$Ø_{JA}$	JEDEC (JESD 51)	—	—	35	°C/W
ESD Protection (Human Body Model)	ESD_{HBM}	JEDEC (JESD 22-A114)	2000	—	—	V
Flammability Rating	UL-94	UL (Class)		V–0		
Moisture Sensitivity Level	MSL	JEDEC (J-STD-020)		2		

Note: While using multiple power supplies, the voltage on any input or I/O pin cannot exceed the power pin during power-up. Power supply sequencing is not required.

2. Functional Description

2.1. Crystal Recommendations

The clock device requires a parallel resonance crystal. Substituting a series resonance crystal causes the clock device to operate at the wrong frequency and violates the ppm specification. For most applications there is a 300 ppm frequency shift between series and parallel crystals due to incorrect loading.

Table 4. Crystal Recommendations

Frequency (Fund)	Cut	Loading	Load Cap	Shunt Cap (max)	Motional (max)	Tolerance (max)	Stability (max)	Aging (max)
25 MHz	AT	Parallel	12–15 pF	5 pF	0.016 pF	35 ppm	30 ppm	5 ppm

2.1.1. Crystal Loading

Crystal loading plays a critical role in achieving low ppm performance. To realize low ppm performance, use the total capacitance the crystal sees to calculate the appropriate capacitive loading (CL).

Figure 1 shows a typical crystal configuration using the two trim capacitors. It is important that the trim capacitors are in series with the crystal. It is not true that load capacitors are in parallel with the crystal and are approximately equal to the load capacitance of the crystal.

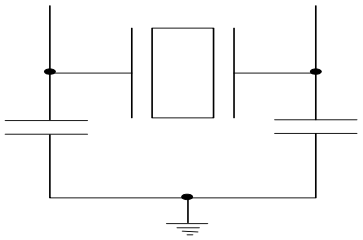

Figure 1. Crystal Capacitive Clarification

2.1.2. Calculating Load Capacitors

In addition to the standard external trim capacitors, consider the trace capacitance and pin capacitance to calculate the crystal loading correctly. Again, the capacitance on each side is in series with the crystal. The total capacitance on both side is twice the specified crystal load capacitance (CL). Trim capacitors are calculated to provide equal capacitive loading on both sides.

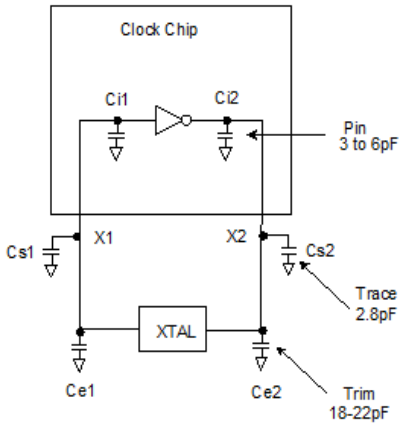

Figure 2. Crystal Loading Example

Use the following formulas to calculate the trim capacitor values for Ce1 and Ce2.

Load Capacitance (each side)

$$Ce = 2 \times CL - (Cs + Ci)$$

Total Capacitance (as seen by the crystal)

$$CLe = \frac{1}{\left(\frac{1}{Ce1 + Cs1 + Ci1} + \frac{1}{Ce2 + Cs2 + Ci2}\right)}$$

- CL: Crystal load capacitance
- CLe: Actual loading seen by crystal using standard value trim capacitors
- Ce: External trim capacitors
- Cs: Stray capacitance (terraced)
- Ci : Internal capacitance (lead frame, bond wires, etc.)

2.2. CKPWRGD_PDB (Power down) Clarification

The CKPWRGD_PDB pin is a dual-function pin. During initial power up, the pin functions as CKPWRGD. Upon the first powerup if the CKPWRGD is low, the device outputs will be disabled, but the crystal oscillator and I^2C logics are active. Once CKPWRGD has been sampled high by the clock chip, the pin assumes a PDB functionality. When the pin has assumed a PDB functionality and the pin is pull low, the device will be placed in standby mode.

2.3. PDB (Power down) Assertion

The PDB pin is an asynchronous active low input used to disable all clocks in a glitch free manner. All outputs will be driven low in power down mode. In power down mode, all outputs, the crystal oscillator and the I^2C logic are disabled.

2.4. PDB Deassertion

When a valid rising edge on CKPWRGD/PDB pin is applied, all outputs are enabled in a glitch free manner within two to six output clock cycle.

2.5. OE Clarification

The OE pins are active high inputs used to enable and disable the output clocks. To enable the output clock, the OE pin needs to be logic high and the I^2C output enable bit needs to be logic high. There are two methods to disable the output clocks: the OE is pulled to a logic low, or the I^2C enable bit is set to a logic low. The OE pins is required to be driven at all time and even though it has an internally 100 kΩ resistor.

2.6. OE Assertion

The OE signals are active high input used for synchronous stopping and starting the DIFF output clocks respectively while the rest of the clock generator continues to function. The assertion of the OE signal by making it logic high causes stopped respective DIFF output to resume normal operation. No short or stretched clock pulses are produced when the clock resumes. The maximum latency from the assertion to active outputs is no more than two to six output clock cycles.

2.7. OE Deassertion

When the OE pin is deasserted by making its logic low, the corresponding DIFF output is stopped cleanly, and the final output state is driven low.

2.8. SSON Clarification

SSON is an active input used to enable –0.5% spread on all DIFF outputs. When sampled high, –0.5% spread is enabled on all DIFF outputs. When sampled low, the DIFF output frequencies are non-spread.

3. Test and Measurement Setup

This diagram shows the test load configuration for the differential clock signals.

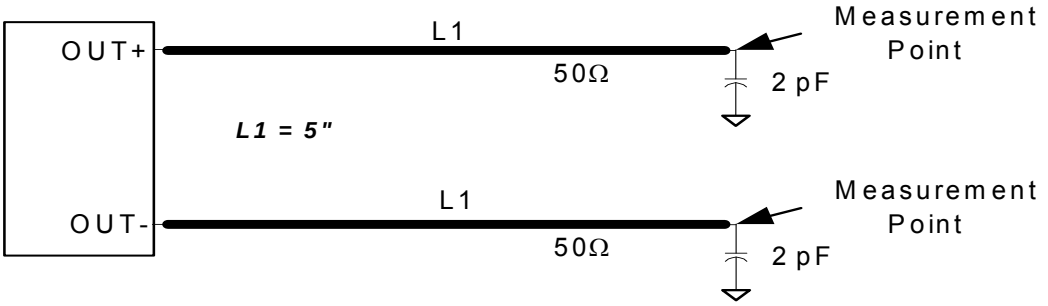

Figure 3. 0.7 V Differential Load Configuration

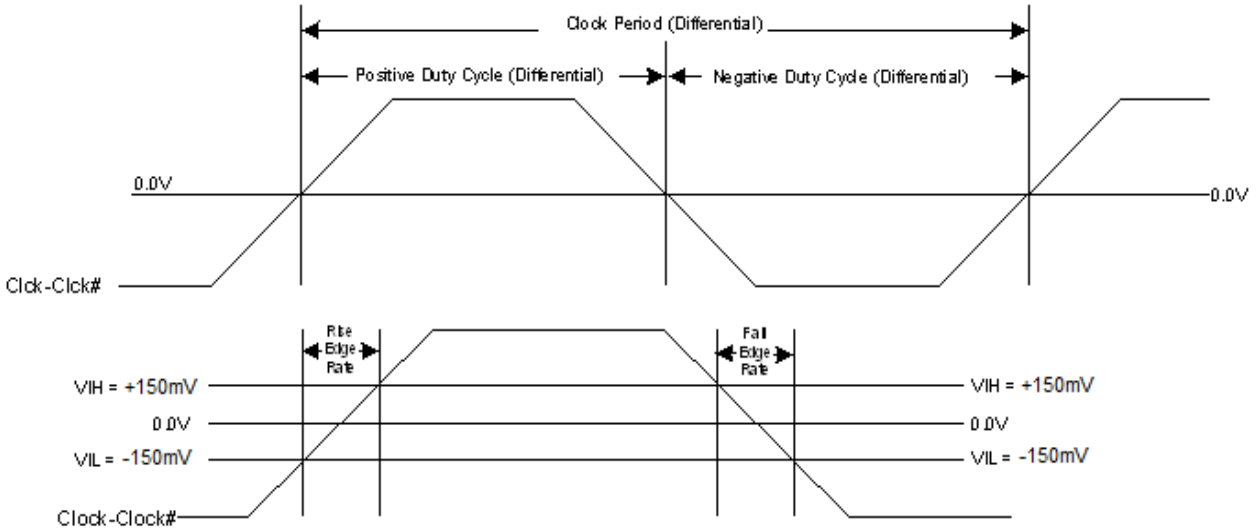

Figure 4. Differential Output Signals (for AC Parameters Measurement)

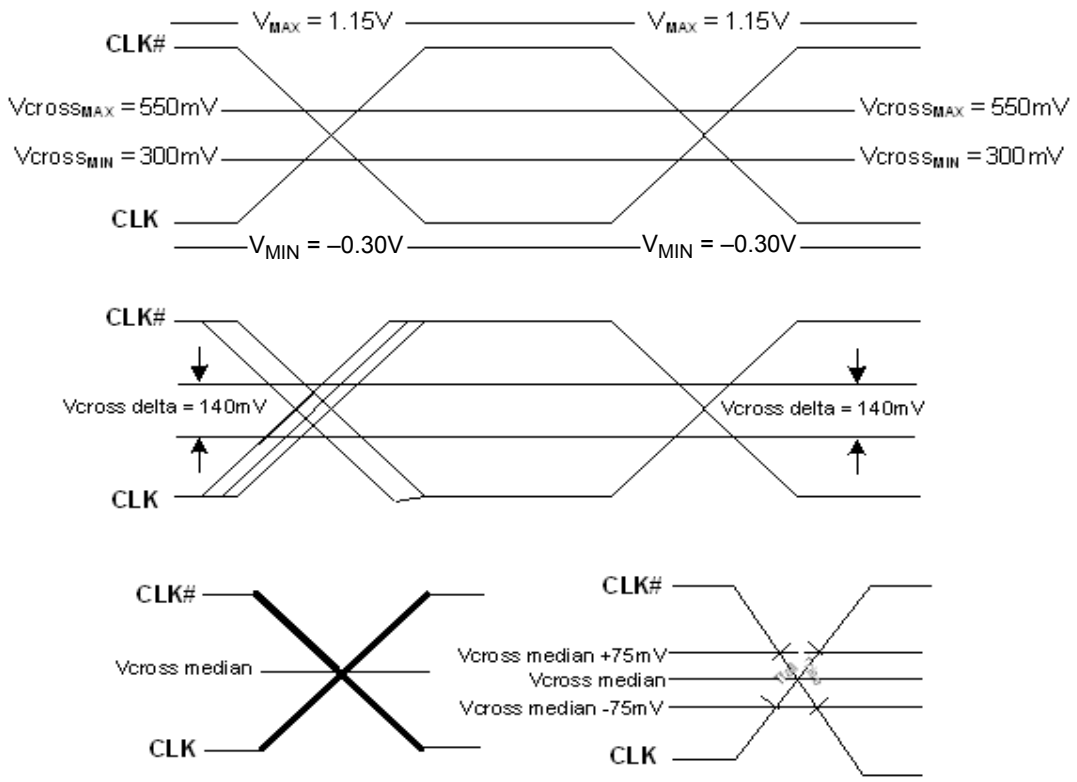

Figure 5. Single-ended Measurement for Differential Output Signals (for AC Parameters Measurement)

4. Control Registers

4.1. Serial Data Interface

To enhance the flexibility and function of the clock synthesizer, a two-signal serial interface is provided. Through the Serial Data Interface, various device functions, such as individual clock output buffers are individually enabled or disabled. The registers associated with the Serial Data Interface initialize to their default setting at power-up. The use of this interface is optional. Clock device register changes are normally made at system initialization, if any are required. The interface cannot be used during system operation for power management functions.

4.2. Data Protocol

The clock driver serial protocol accepts byte write, byte read, block write, and block read operations from the controller. For block write/read operation, access the bytes in sequential order from lowest to highest (most significant bit first) with the ability to stop after any complete byte is transferred. For byte write and byte read operations, the system controller can access individually indexed bytes. The offset of the indexed byte is encoded in the command code described in Table 1 on page 4.

The block write and block read protocol is outlined in Table 5 while Table 6 outlines byte write and byte read protocol. The slave receiver address is 11010110 (D6h).

Table 5. Block Read and Block Write Protocol

Block Write Protocol		Block Read Protocol	
Bit	**Description**	**Bit**	**Description**
1	Start	1	Start
8:2	Slave address—7 bits	8:2	Slave address—7 bits
9	Write	9	Write
10	Acknowledge from slave	10	Acknowledge from slave
18:11	Command Code—8 bits	18:11	Command Code–8 bits
19	Acknowledge from slave	19	Acknowledge from slave
27:20	Byte Count—8 bits	20	Repeat start
28	Acknowledge from slave	27:21	Slave address—7 bits
36:29	Data byte 1–8 bits	28	Read = 1
37	Acknowledge from slave	29	Acknowledge from slave
45:38	Data byte 2–8 bits	37:30	Byte Count from slave—8 bits
46	Acknowledge from slave	38	Acknowledge
....	Data Byte/Slave Acknowledges	46:39	Data byte 1 from slave—8 bits
....	Data Byte N–8 bits	47	Acknowledge
....	Acknowledge from slave	55:48	Data byte 2 from slave—8 bits
....	Stop	56	Acknowledge
		....	Data bytes from slave/Acknowledge
		....	Data Byte N from slave—8 bits
		....	NOT Acknowledge
		....	Stop

Table 6. Byte Read and Byte Write Protocol

Byte Write Protocol		Byte Read Protocol	
Bit	**Description**	**Bit**	**Description**
1	Start	1	Start
8:2	Slave address–7 bits	8:2	Slave address–7 bits
9	Write	9	Write
10	Acknowledge from slave	10	Acknowledge from slave
18:11	Command Code–8 bits	18:11	Command Code–8 bits
19	Acknowledge from slave	19	Acknowledge from slave
27:20	Data byte–8 bits	20	Repeated start
28	Acknowledge from slave	27:21	Slave address–7 bits
29	Stop	28	Read
		29	Acknowledge from slave
		37:30	Data from slave–8 bits
		38	NOT Acknowledge
		39	Stop

Control Register 0. Byte 0

Bit	D7	D6	D5	D4	D3	D2	D1	D0
Name								
Type	R/W	R/W	R/W	R/W	R/W	R/W	R/W	R/W

Reset settings = 00000000

Bit	Name	Function
7:0	Reserved	

Control Register 1. Byte 1

Bit	D7	D6	D5	D4	D3	D2	D1	D0
Name				DIFF0_OE		DIFF1_OE		DIFF2_OE
Type	R/W	R/W	R/W	R/W	R/W	R/W	R/W	R/W

Reset settings = 00010101

Bit	Name	Function
7:5	Reserved	
4	DIFF0_OE	**Output Enable for DIFF0.** 0: Output disabled. 1: Output Enabled.
3	Reserved	
2	DIFF1_OE	**Output Enable for DIFF1.** 0: Output disabled. 1: Output enabled.
1	Reserved	
0	DIFF2_OE	**Output Enable for DIFF2.** 0: Output disabled. 1: Output enabled.

Control Register 2. Byte 2

Bit	D7	D6	D5	D4	D3	D2	D1	D0
Name	DIFF3_OE	DIFF4_OE	DIFF5_OE					
Type	R/W	R/W	R/W	R/W	R/W	R/W	R/W	R/W

Reset settings = 11100000

Bit	Name	Function
7	DIFF3_OE	**Output Enable for DIFF3.** 0: Output disabled. 1: Output enabled.
6	DIFF4_OE	**Output Enable for DIFF4.** 0: Output disabled. 1: Output enabled.
5	DIFF5_OE	**Output Enable for DIFF5.** 0: Output disabled. 1: Output enabled.
4:0	Reserved	

Control Register 3. Byte 3

Bit	D7	D6	D5	D4	D3	D2	D1	D0
Name	Rev Code[3:0]				Vendor ID[3:0]			
Type	R/W	R/W	R/W	R/W	R/W	R/W	R/W	R/W

Reset settings = 00001000

Bit	Name	Function
7:4	Rev Code[3:0]	**Program Revision Code.**
3:0	Vendor ID[3:0]	**Vendor Identification Code.**

Control Register 4. Byte 4

Bit	D7	D6	D5	D4	D3	D2	D1	D0
Name	BC[7:0]							
Type	R/W	R/W	R/W	R/W	R/W	R/W	R/W	R/W

Reset settings = 00000110

Bit	Name	Function
7:0	BC[7:0]	**Byte Count Register.**

Control Register 5. Byte 5

Bit	D7	D6	D5	D4	D3	D2	D1	D0
Name	DIFF_Amp_Sel	DIFF_Amp_Cntl[2]	DIFF_Amp_Cntl[1]	DIFF_Amp_Cntl[0]				
Type	R/W	R/W	R/W	R/W	R/W	R/W	R/W	R/W

Reset settings = 11011000

Bit	Name	Function
7	DIFF_Amp_Sel	**Amplitude Control for DIFF Differential Outputs.** 0: Differential outputs with Default amplitude. 1: Differential outputs amplitude is set by Byte 5[6:4].
6	DIFF_Amp_Cntl[2]	**DIFF Differential Outputs Amplitude Adjustment.** 000: 300 mV 001: 400 mV 010: 500 mV 011: 600 mV 100: 700 mV 101: 800 mV 110: 900 mV 111: 1000 mV
5	DIFF_Amp_Cntl[1]	
4	DIFF_Amp_Cntl[0]	
3:0	Reserved	

5. Pin Descriptions: 32-Pin QFN

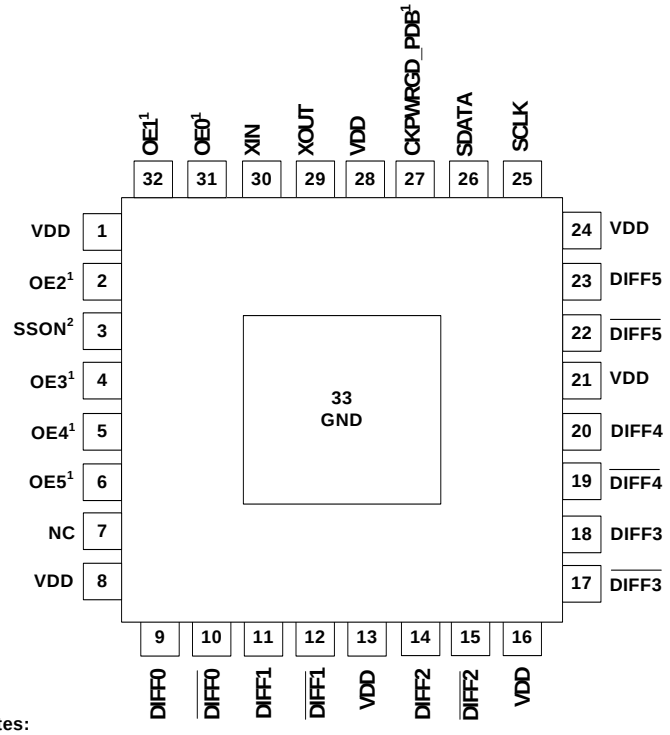

Notes:
1. Internal 100 kohm pull-up.
2. Internal 100 kohm pull-down.

Table 7. Si52146 32-Pin QFN Descriptions

Pin #	Name	Type	Description
1	VDD	PWR	3.3 V power supply
2	OE2	I,PU	3.3 V input to disable DIFF2 (internal 100 kΩ pull-up). Refer to Table 1 on page 4 for OE specifications.
3	SSON	I, PD	3.3 V-tolerant input for enabling –0.5% spread on DIFF clocks (internal 100 kΩ pull-down)
4	OE3	I,PU	3.3 V input to disable DIFF3 (internal 100 kΩ pull-up). Refer to Table 1 on page 4 for OE specifications.
5	OE4	I,PU	3.3 V input to disable DIFF4 (internal 100 kΩ pull-up). Refer to Table 1 on page 4 for OE specifications.
6	OE5	I,PU	3.3 V input to disable DIFF5 (internal 100 kΩ pull-up). Refer to Table 1 on page 4 for OE specifications.
7	NC	NC	No connect
8	VDD	PWR	3.3 V power supply
9	DIFF0	O, DIF	0.7 V, 100 MHz differential clock
10	$\overline{\text{DIFF0}}$	O, DIF	0.7 V, 100 MHz differential clock
11	DIFF1	O, DIF	0.7 V, 100 MHz differential clock

Table 7. Si52146 32-Pin QFN Descriptions

Pin #	Name	Type	Description
12	$\overline{\text{DIFF1}}$	O, DIF	0.7 V, 100 MHz differential clock
13	VDD	PWR	3.3 V power supply
14	DIFF2	O, DIF	0.7 V, 100 MHz differential clock
15	$\overline{\text{DIFF2}}$	O, DIF	0.7 V, 100 MHz differential clock
16	VDD	PWR	3.3 V power supply
17	$\overline{\text{DIFF3}}$	O, DIF	0.7 V, 100 MHz differential clock
18	DIFF3	O, DIF	0.7 V, 100 MHz differential clock
19	$\overline{\text{DIFF4}}$	O, DIF	0.7 V, 100 MHz differential clock
20	DIFF4	O, DIF	0.7 V, 100 MHz differential clock
21	VDD	PWR	3.3 V power supply
22	$\overline{\text{DIFF5}}$	O, DIF	0.7 V, 100 MHz differential clock
23	DIFF5	O, DIF	0.7 V, 100 MHz differential clock
24	VDD	PWR	3.3 V power supply
25	SCLK	I	SMBus compatible SCLOCK
26	SDATA	I/O	SMBus compatible SDATA
27	CKPWRGD_PDB	I, PU	3.3 V CMOS input. A real-time active low input for asserting power down (PDB) and disabling all outputs (internal 100 kΩ pull-up).
28	VDD	PWR	3.3 V power supply
29	XOUT	O	25.00 MHz crystal output, Float XOUT if using only CLKIN (clock input)
30	XIN/CLKIN	I	25.00 MHz crystal input or 3.3 V, 25 MHz clock input
31	OE0	I,PU	3.3 V input to disable DIFF0 (internal 100 kΩ pull-up). Refer to Table 1 on page 4 for OE specifications.
32	OE1	I,PU	3.3 V input to disable DIFF1 (internal 100 kΩ pull-up). Refer to Table 1 on page 4 for OE specifications.
33	GND	GND	Ground for bottom pad of the IC.

6. Ordering Guide

Part Number	Package Type	Temperature
Lead-free		
Si52146-A01AGM	32-pin QFN	Industrial, –40 to 85 °C
Si52146-A01AGMR	32-pin QFN—Tape and Reel	Industrial, –40 to 85 °C

7. Package Outline

Figure 6 illustrates the package details for the Si52146. Table 8 lists the values for the dimensions shown in the illustration.

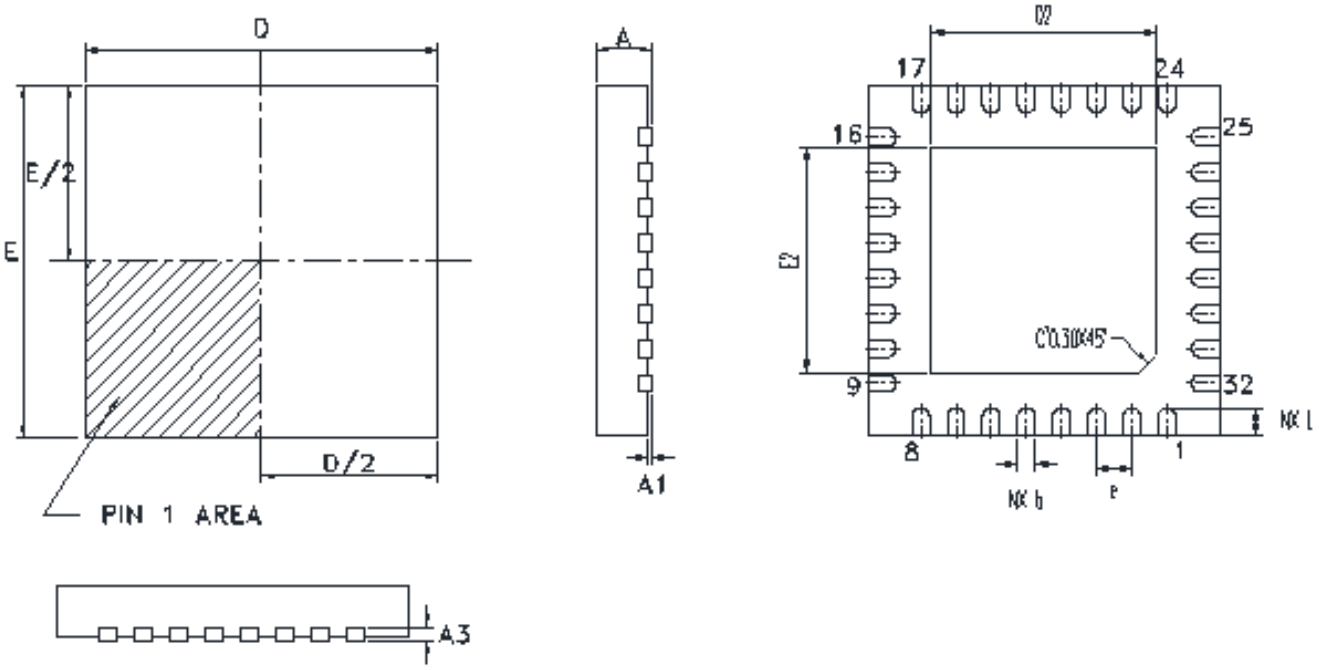

Figure 6. 32-Pin Quad Flat No Lead (QFN) Package

Table 8. Package Diagram Dimensions

Symbol	Millimeters		
	Min	Nom	Max
A	0.70	0.75	0.80
A1	0.00	0.02	0.05
A3	0.175	0.20	0.225
b	0.20	0.25	0.30
D	4.90	5.00	5.10
D2	3.15	3.20	3.25
e	0.50 BSC		
E	4.90	5.00	5.10
E2	3.15	3.20	3.25
L	0.30	0.40	0.50

Notes:

1. All dimensions shown are in millimeters (mm) unless otherwise noted.
2. Dimensioning and Tolerancing per ANSI Y14.5M-1994.
3. Recommended card reflow profile is per the JEDEC/IPC J-STD-020 specification for Small Body Components.
4. Coplanarity less than 0.08 mm.
5. Terminal #1 identifier and terminal numbering convention conform to JESD 95-1 SPP-012.

CONTACT INFORMATION

Silicon Laboratories Inc.

400 West Cesar Chavez
Austin, TX 78701
Tel: 1+(512) 416-8500
Fax: 1+(512) 416-9669
Toll Free: 1+(877) 444-3032

Please visit the Silicon Labs Technical Support web page:
https://www.silabs.com/support/pages/contacttechnicalsupport.aspx
and register to submit a technical support request.

The information in this document is believed to be accurate in all respects at the time of publication but is subject to change without notice. Silicon Laboratories assumes no responsibility for errors and omissions, and disclaims responsibility for any consequences resulting from the use of information included herein. Additionally, Silicon Laboratories assumes no responsibility for the functioning of undescribed features or parameters. Silicon Laboratories reserves the right to make changes without further notice. Silicon Laboratories makes no warranty, representation or guarantee regarding the suitability of its products for any particular purpose, nor does Silicon Laboratories assume any liability arising out of the application or use of any product or circuit, and specifically disclaims any and all liability, including without limitation consequential or incidental damages. Silicon Laboratories products are not designed, intended, or authorized for use in applications intended to support or sustain life, or for any other application in which the failure of the Silicon Laboratories product could create a situation where personal injury or death may occur. Should Buyer purchase or use Silicon Laboratories products for any such unintended or unauthorized application, Buyer shall indemnify and hold Silicon Laboratories harmless against all claims and damages.

Silicon Laboratories and Silicon Labs are trademarks of Silicon Laboratories Inc.
Other products or brandnames mentioned herein are trademarks or registered trademarks of their respective holders.