Si2178

Worldwide Digital and Analog TV Tuner with Analog Demodulator

Description

The Si2178 integrates a PAL/SECAM/NTSC analog TV demodulator with a universal hybrid TV tuner supporting all worldwide digital and analog TV standards. The Si2178 requires no external balun and offers the lowest-cost BOM for a hybrid TV tuner with analog demodulator. By combining Silicon Labs' proven digital low-IF architecture with a 4th-generation RF front-end, the Si2178 maintains the highest performance that exceeds MOPLL-based tuners, including industry-leading 2nd-order distortion performance.

Compared with competing silicon TV tuners, the Si2178 delivers an unprecedented level of front-end integration, resulting in the lowest number of external BOM components. No external tracking filters, wire-wound inductors, LNAs, SAW filters or inductive power supply filtering components are needed. The Si2178 offers low power consumption as well as an option for single or dual power supply operation. Also included is an internal power-on reset circuit, eliminating the need for external brownout protection components or additional pins in module applications.

For next-generation digital TV broadcast standards, such as DVB-T2 and DVB-C2, that are sensitive to integrated phase noise, the Si2178 offers industry-leading phase noise performance. A software-selectable cable mode is also included which offers high return-loss performance.

As with prior-generation Silicon Labs TV tuners, the Si2178 delivers superior picture quality and a higher number of received stations when compared to other silicon tuners and discrete MOPLL-based tuners. Both the tuner and analog demodulator incorporate worldwide field testing experience from three previous generations in high-volume production, to deliver the highest tolerance to real-world field reception conditions. The Si2178 also incorporates a harmonic-rejection mixer that delivers excellent immunity to Wi-Fi and LTE interference across the full RF input frequency range, with no need for external filtering components.

Features

- Worldwide hybrid TV tuner
  - Analog TV: NTSC, PAL/SECAM
  - Digital TV: ATSC/QAM, DVB-T2/T/C2/C, ISDB-T/C, DTMB
  - 42–1002 MHz frequency range
- Analog TV demodulator
  - Superior video SNR performance
  - Overmodulation and ICPM tolerant
- Industry-leading margin to A/74, NorDig, D-Book, C-Book, ARIB, EN55020, OpenCable™ specifications
- Lowest BOM for a silicon hybrid TV tuner
  - No balun at RF input
  - No external SAW filters or wire-wound inductors
  - Integrated LNAs and complete tracking filters
- Best-in-class real-world reception
  - Exceeds discrete MOPLL-based tuners
  - Industry-leading phase noise performance
  - High immunity to Wi-Fi and LTE interference
- Low power consumption
  - 3.3 V and 1.8 V power supplies
  - Single-supply option for 3.3 V-only operation
- Integrated power-on reset circuit
- Flexible output interface
  - Combined ALIF/DLIF output to SoC
  - Optional DLIF output to external demodulator
- Standard CMOS process technology
- 4x4 mm, 28-pin QFN package
- RoHS compliant

Applications

- 1/2-NIM, 3/4-NIM, and full-NIM tuner module
- iDTV (Integrated Digital TV)
- Hybrid terrestrial and cable STB
- Hybrid PVR, DVD and Blu-Ray disc recorder
- PC-TV accessories

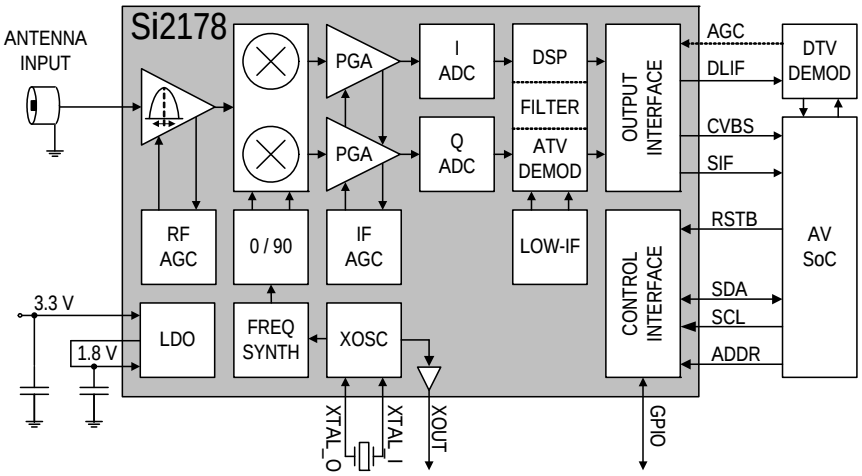

Copyright © 2012 by Silicon Laboratories

Application Example: Integrated Digital TV (iDTV)

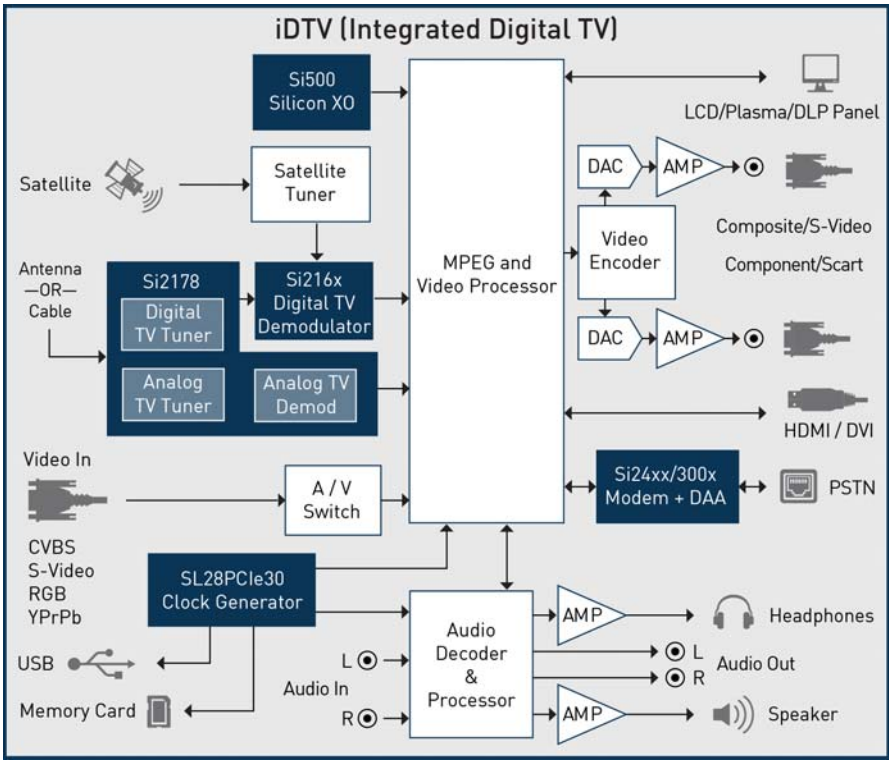

Selection Guide

Part #	Description
Si2178	Worldwide hybrid TV tuner with analog demodulator for NTSC, PAL/SECAM, ATSC/QAM, DVB-T2/T/C2/C, ISDB-T/C, DTMB

Pin Assignments

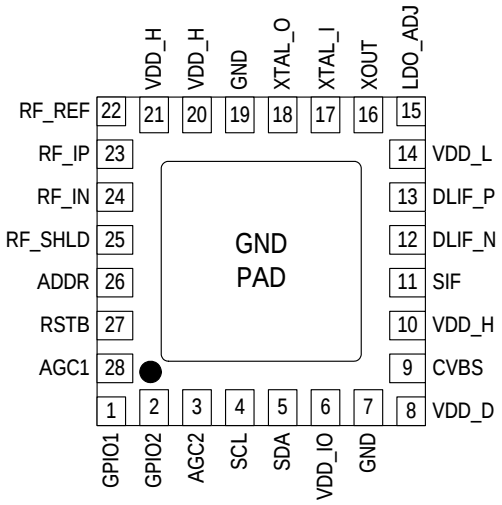

4x4 mm QFN-28 Package Information

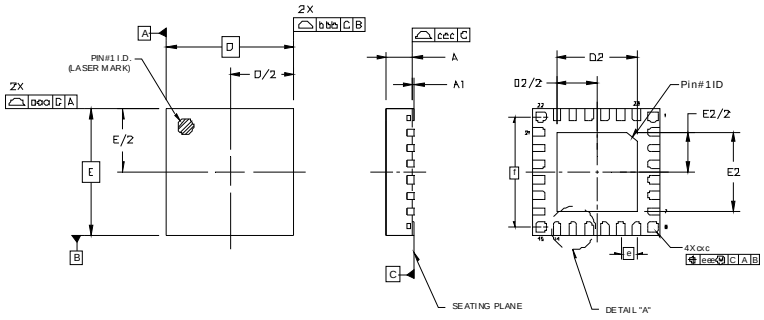

Symbol	Min	Nom	Max	Unit
A	0.80	0.85	0.90	mm
D, E		4.00 BSC		mm
e		0.50 BSC		mm
f		3.50 BSC		mm

Copyright © 2012 by Silicon Laboratories

Silicon Laboratories and Silicon Labs are trademarks of Silicon Laboratories Inc.
Other products or brandnames mentioned herein are trademarks or registered trademarks of their respective holders