Switching Regulators

# SI-8120JF

Data Sheet 27469.52*

## *Step-Down to 12.0 V, 1.5 A, DC/DC Converter*

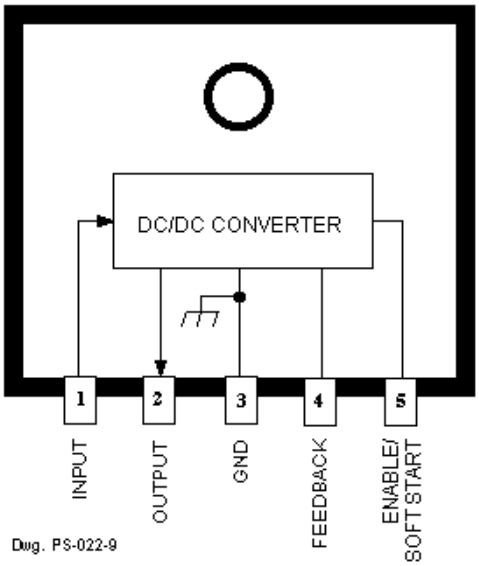

Dwg. PS-022-9



### ABSOLUTE MAXIMUM RATINGS

Input Voltage, $V_I$ . . . . . **43 V**

Output Current, $I_O$ . . . . . **1.5 A***

Enable Input Voltage, $V_{OE}$ . . . . . **6 V**

Junction Temperature, $T_J$ . . . . **+125°C**

Storage Temperature Range, $T_S$ . . . . . **-40°C to +125°C**

* Output current rating is limited by input voltage, duty cycle, and ambient temperature. Under any set of conditions, do not exceed a junction temperature of +125°C.

Designed to meet high-current requirements at high efficiency in industrial and consumer applications; embedded core, memory, or logic supplies; TVs, VCRs, and office or telecommunications equipment, the SI-8120JF dc/dc step-down (buck) converter offers a constant 125 kHz switching frequency essential for low EMI noise. The npn switch is included on the die along with the oscillator, control, and logic circuitry requiring only four external components for a regulated 12.0 V output at up to 1.5 A.

A wide input voltage range and integrated thermal and overcurrent protection enhance overall system reliability. Reference accuracy and excellent temperature characteristics are provided. An output-enable input gives the designer complete control over power up, standby, or power down.

This device is supplied in a fully molded TO-220-style 5-lead flange-mounted , high power, isolated plastic package. A similar device in a lower-power surface-mount plastic package is the SI-8120JD.

### FEATURES

- 14 V to 40 V Input Range
- 1.5 A Output Current at 12 V
- 2% Output Voltage Tolerance
- Foldback Current Limiting
- Constant 125 kHz Switching Frequency
- 200 µA Maximum Standby Current
- Soft Start Prevents Supply Voltage Dip
- Remote Voltage Sensing
- Thermal Protection

### APPLICATIONS

- TVs, VCRs, Electronic Games
- Embedded Core, Memory, or Logic Supplies
- Printers and Other Office Equipment
- Industrial Machinery
- Telecommunications Equipment

Always order by complete part number, e.g., **SI-8120JF** .

## FUNCTIONAL BLOCK DIAGRAM

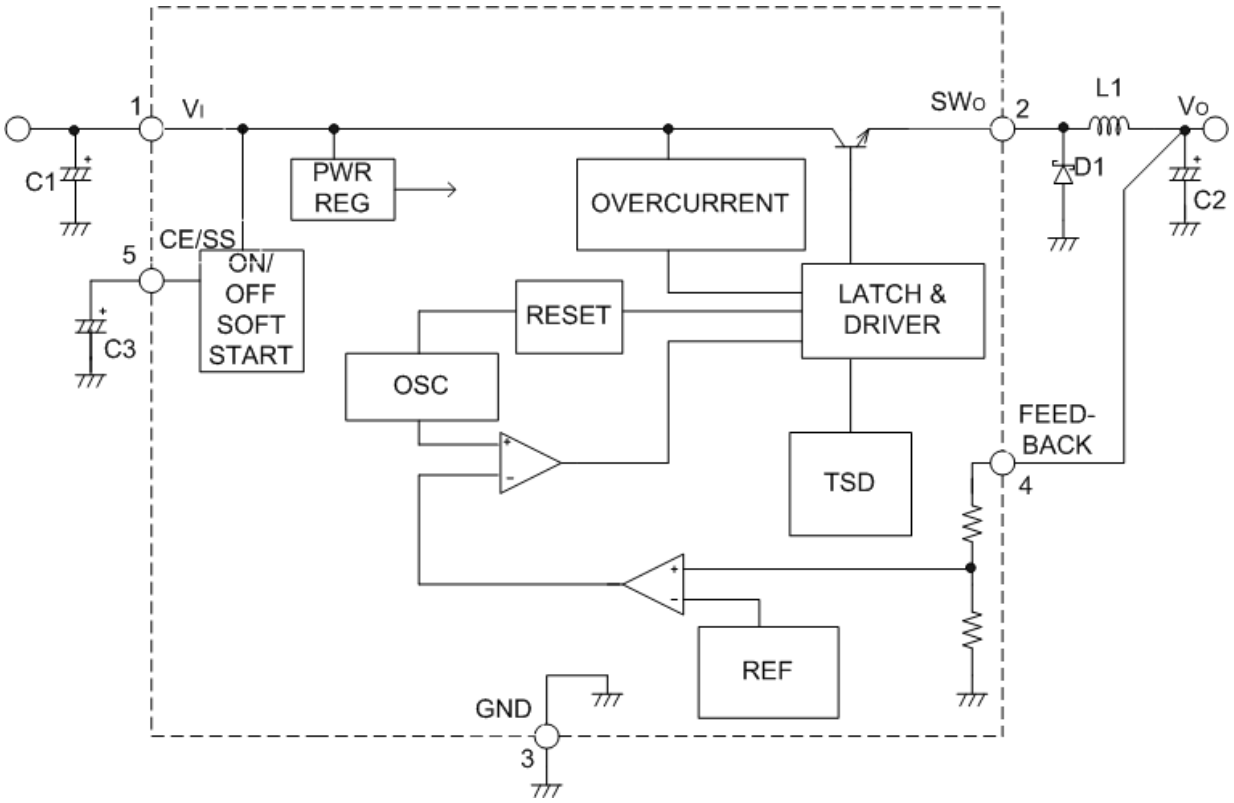


### Allowable Package Power Dissipation

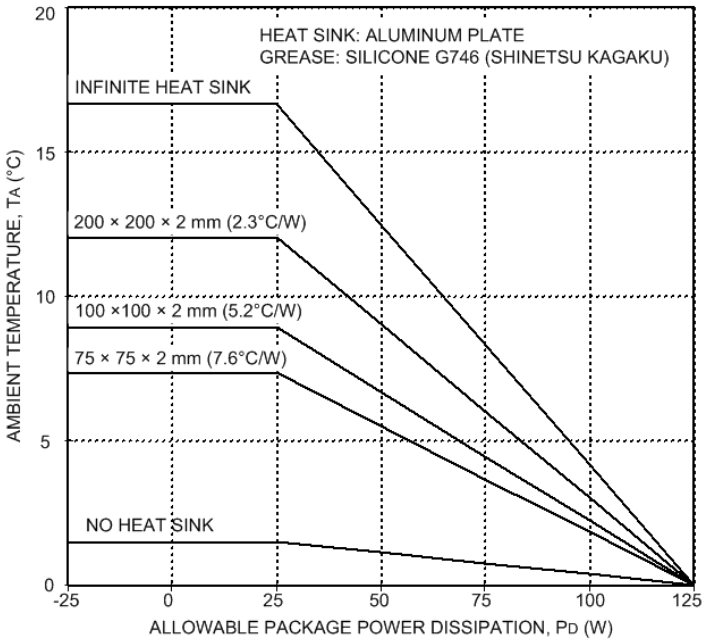


### Recommended Operating Conditions

| | Min | Max | Units |
|---|---|---|---|
| DC Input Voltage ($I_O \le 1$ A) | 14 | 15 | V |
| ($I_O \le 1.5$ A) | 15 | 40 | V |
| DC Output Current ($V_I \ge 6.3$ V) | 0 | 1.5 | A |
| Operating Junction Temp. | -30 | +125 | °C |

For the availability of parts meeting -40°C requirements, contact Allegro's Sales Representative.

This data sheet is based on Sanken data sheet SSJ-02322



Allegro MicroSystems, Inc.
115 Northeast Cutoff, Box 15036
Worcester, Massachusetts 01615-0036
Copyright © 2004, 2005 Allegro MicroSystems, Inc.

Sanken

## ELECTRICAL CHARACTERISTICS at $T_A$ = +25°C, $V_I$ = 24 V, $I_O$ = 0.5 A (unless otherwise noted).

| Characteristic | Symbol | Test Conditions | Limits | | | |
|---|---|---|---|---|---|---|
| | | | Min. | Typ. | Max. | Units |
| Output Voltage | $V_O$ | | 11.76 | 12.00 | 12.24 | V |
| Ref. Volt. Temp. Coeff. | $a_{Vref}$ | | — | ±0.5 | — | mV/°C |
| Output Short-Circuit Current | $I_{OM}$ | See note | 1.6 | — | — | A |
| Efficiency | η | | — | 88 | — | % |
| Operating Frequency | f | | — | 125 | — | kHz |
| Line Regulation | $\Delta V_{O(\Delta VI)}$ | $V_I$ = 18 V ~ 30 V, $I_O$ = 0.5 A | — | 60 | 130 | mV |
| Load Regulation | $\Delta V_{O(\Delta IO)}$ | $V_I$ = 24 V, $I_O$ = 0.2 A ~ 0.8 A | — | 10 | 40 | mV |
| Quiescent Current | $I_{IQ}$ | $I_O$ = 0 A | — | 7.0 | — | mA |
| | | $V_{CE}$ = 0.3 V | — | — | 200 | µA |
| Chip Enable Voltage | $V_{CE}$ | Converter turn-off voltage | — | — | 0.5 | V |
| Soft-Start Current | $I_{SS}$ | $V_{SS}$ = 0 V | — | — | -100 | µA |

Typical values are given for circuit design information only.

Note: Output short-circuit current is at point where output voltage has decreased 5% below $V_{O(nom)}$.

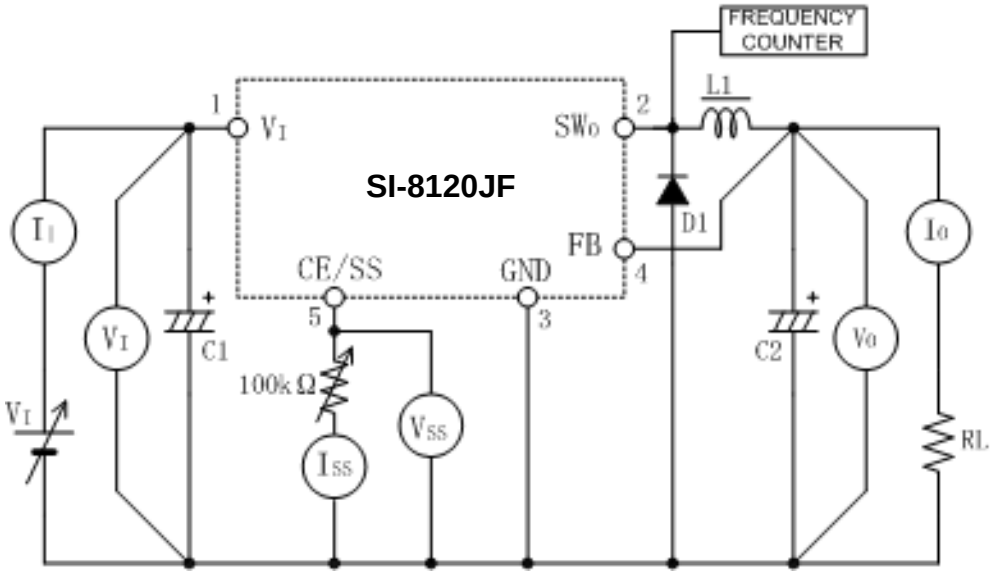


**Test Circuit**

C1 = 220 µF/50 V
C2 = 470 µF/25 V
C3 = 0.47 µF/10 V
L1 = 100 µH
D1 = Sanken RK-16

## TYPICAL CHARACTERISTICS

($T_A$ = 25°C)

■ Efficiency

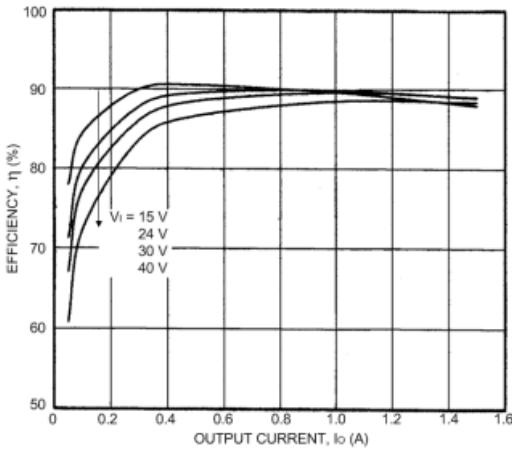


■ Overcurrent Protection

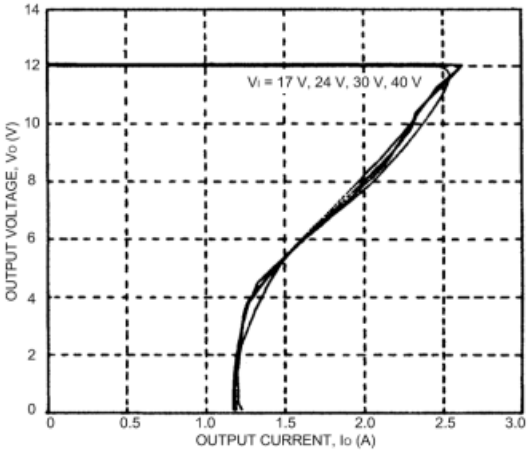


■ Low-Voltage Behavior

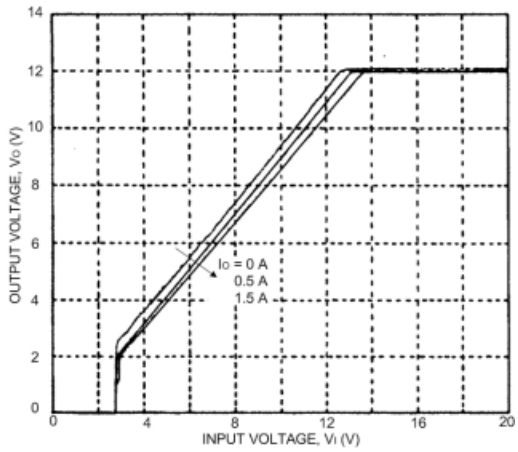


■ Load Regulation

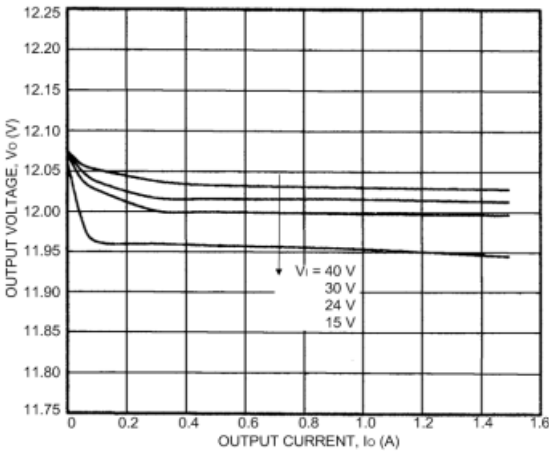


■ Temperature Stability

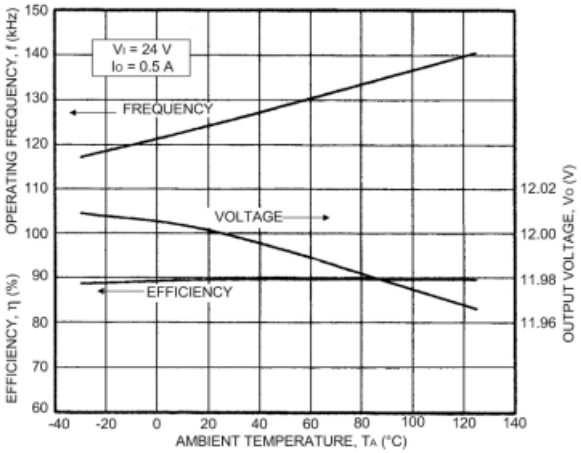




Allegro MicroSystems, Inc.
115 Northeast Cutoff, Box 15036
Worcester, Massachusetts 01615-0036
SanKen

## APPLICATIONS INFORMATION

**Input Capacitor** (C1). Capacitors with low impedance for high-frequency ripple current must be used.

**Output Capacitor** (C2). Capacitors with low impedance for high-frequency ripple current must be used. Especially when the C2 impedance is high, the switching waveform may not be normal at low temperatures. Film or tantalum capacitor for C2 may cause abnormal oscillations.

**Catch Diode** (D1). Diode D1 must be a Schottky diode. Other diode types will result in increased forward voltage spikes, reverse current flow, increased IC power dissipation during the off period, and possible destruction of the IC.

**Choke Coil** (L1). If the winding resistance of the choke coil is too high, the circuit efficiency will decrease. As the overcurrent protection start current is approximately 2.5 A, attention must be paid to the heating of the coil by magnetic saturation due to overload. To reduce the output ripple, the inductor may be increased at the expense of excessive board area and cost.

**Soft-Start Capacitor** (C3). Soft start for the converter is enabled by connecting a capacitor between terminal 5 and ground. The converter may be turned off by decreasing the terminal 5 voltage below 0.5 V with either an npn small-signal transistor or the output of open-collector TTL. If both a large soft-start capacitor and on/off control are desired, collector current limiting must be used to prevent transistor damage. No external voltage can be applied to terminal 5.

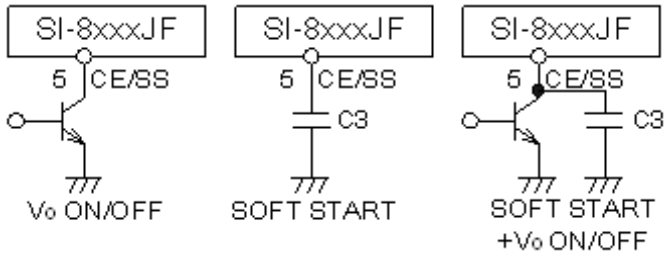


**Parallel Operation.** Parallel operation to increase load current is not permitted.

**Overcurrent Protection.** The SI-8000JF series has a built-in fold-back type overcurrent protection circuit, which limits the output current at a start-up mode. It thus cannot be used in applications that require current at the start-up mode such as:
(1) constant-current load,
(2) power supply with positive and negative outputs to common load (a center-tap type power supply), or
(3) raising the output voltage by putting a diode or a resistor between the device ground and system ground.

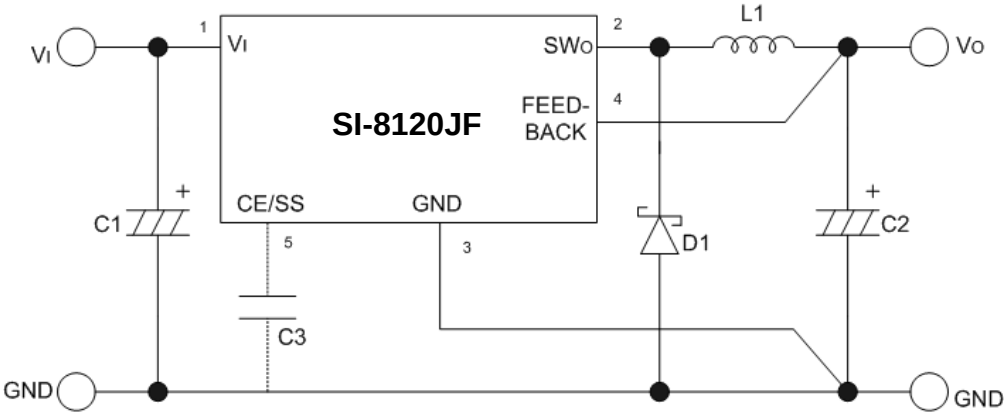


**Typical Application**

## APPLICATIONS INFORMATION (cont.)

**Thermal Protection.** Circuitry turns off the switching transistor when the junction temperature rises above 150°C. It is intended only to protect the device from failures due to excessive junction temperatures and should not imply that output short circuits or continuous overloads are permitted.

**Heat Radiation and Reliability.** The reliability of the IC is directly related to the junction temperature ($T_J$) in its operation. Accordingly, careful consideration should be given to heat dissipation. The graph on page 2 illustrates the effect of thermal resistance on the allowable package power dissipation.

When mounting to a heat sink, apply silicone grease (Shin-Etsu Chemical G746, Dow Corning Toray Silicone SC102, or Toshiba Silicone SY6260). Recommended mounting hardware torque: 0.588 ~ 0.686 Nm or 6.0 ~ 7.0 kgf•cm (4.34 ~ 5.06 lbf•ft).

The junction temperature ($T_J$) can be determined from either of the following equations:

$$T_J = (P_D R_{\theta JA}) + T_A$$

or

$$T_J = (P_D R_{\theta JC}) + T_C$$

where $P_D = V_I I_I - V_O I_O - V_F I_O(1 - [V_O/V_I])$
or the adjacent graph,
$V_F$ = the Schottky diode forward voltage, and
$R_{\theta JC}$ = 6°C/W.

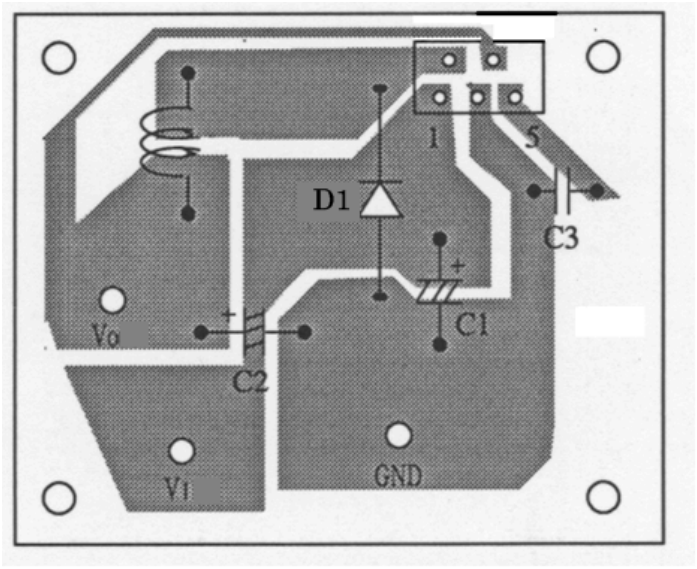


**Layout Guideline**

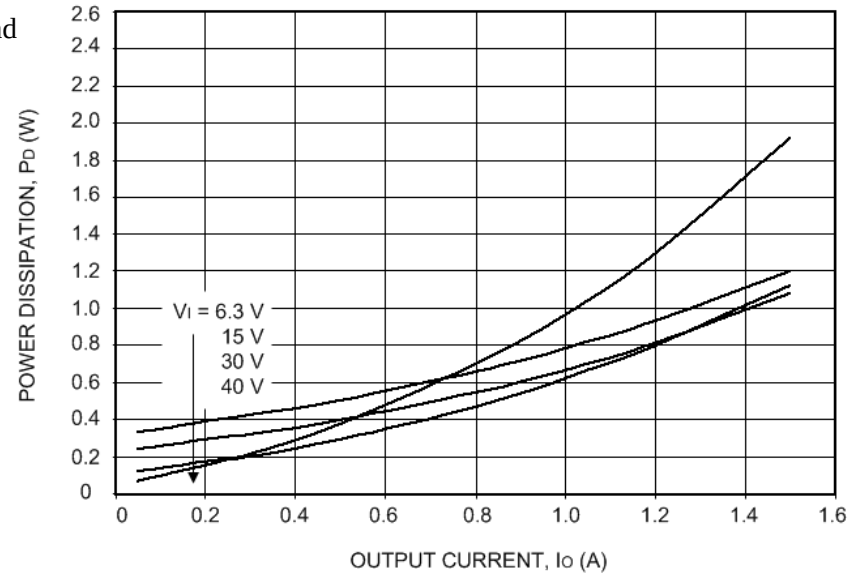




Allegro MicroSystems, Inc.
115 Northeast Cutoff, Box 15036
Worcester, Massachusetts 01615-0036
SanKen

## Dimensions in Millimeters

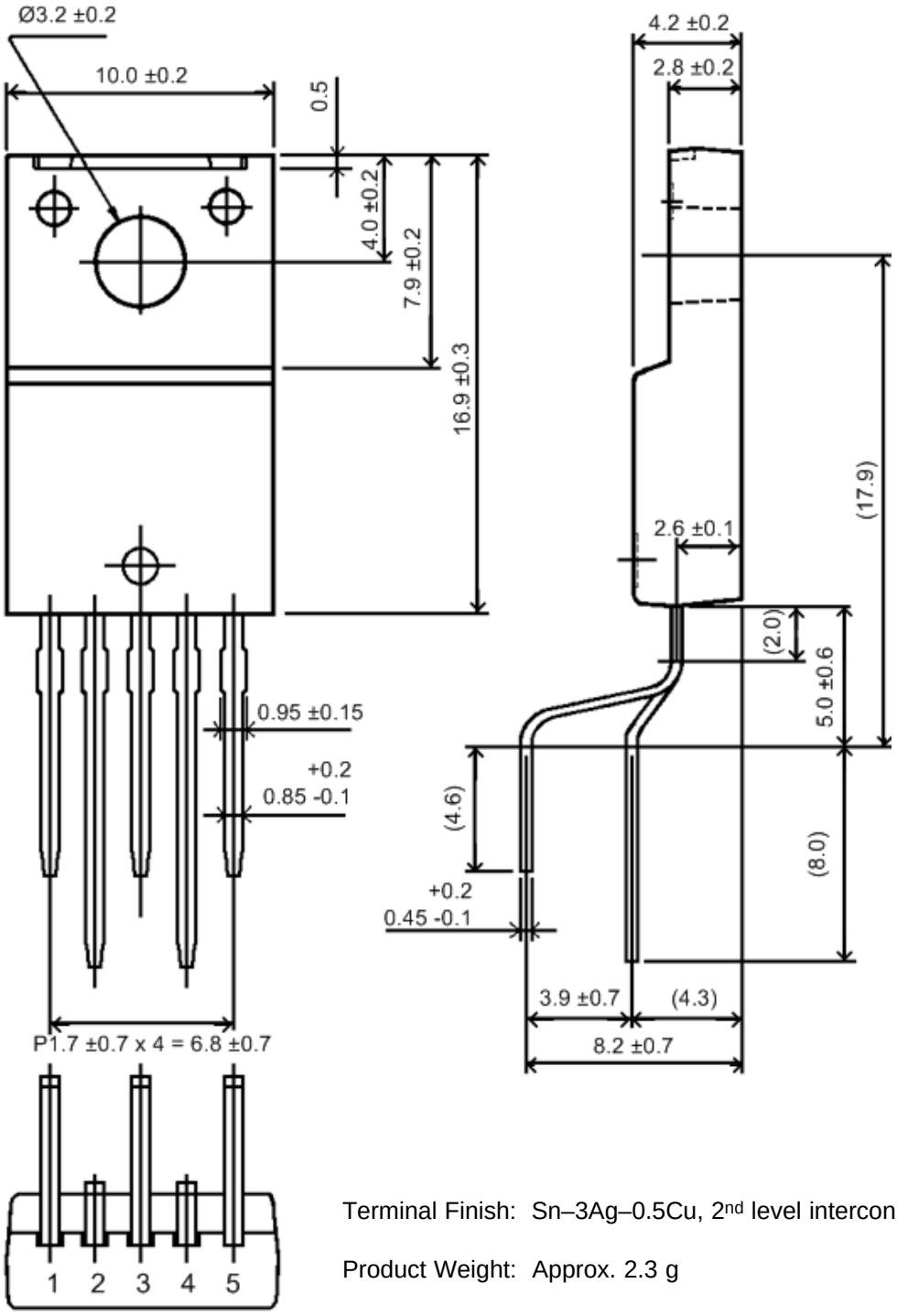


Terminal Finish: Sn–3Ag–0.5Cu, 2nd level interconnect category (e1)

Product Weight: Approx. 2.3 g

Terminal spacing is measured at lead tips.

## Shipping Container Dimensions in Millimeters

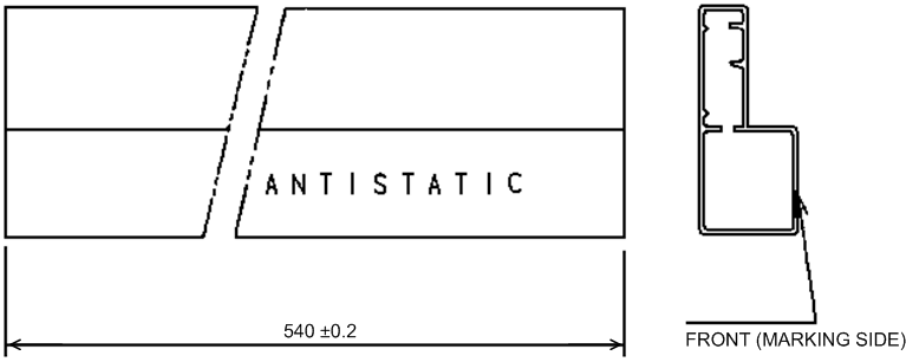


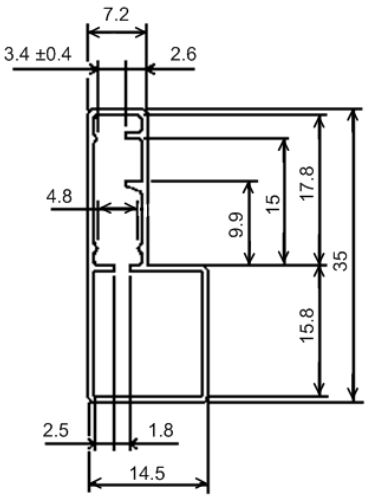


Primary Packing: 50 pieces per stick

Product Thickness: 0.7 mm ±0.3 mm
Material: Hard polyvinylchloride (transparent)
Warp: Within 2 mm against L-shape dimension

Secondary Packing: Ten sticks, four layers (2000 pieces per box). Cardboard box.

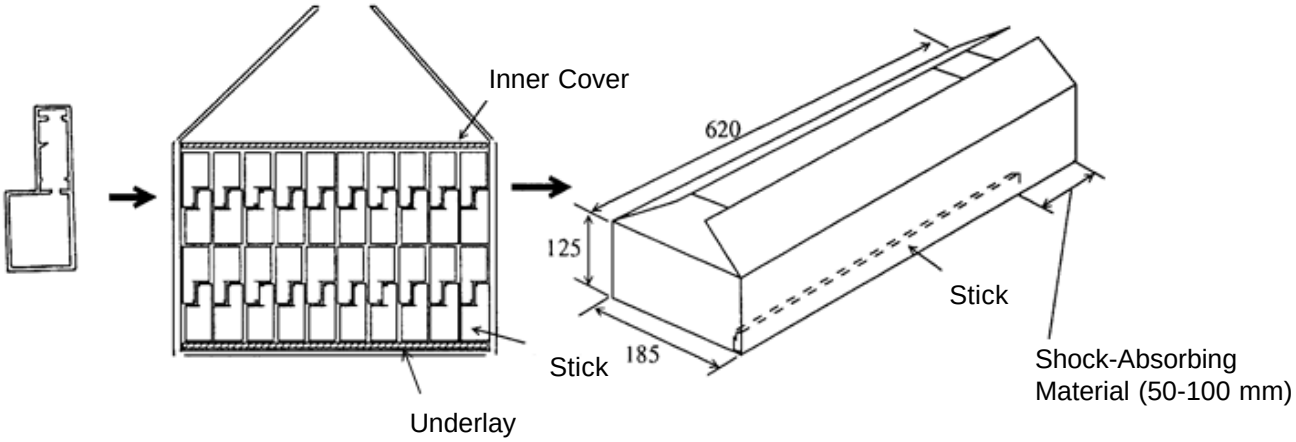




Allegro MicroSystems, Inc.
115 Northeast Cutoff, Box 15036
Worcester, Massachusetts 01615-0036
SanKen

*The products described herein are manufactured in Japan by Sanken Electric Co., Ltd. for sale by Allegro MicroSystems, Inc.*

*Sanken and Allegro reserve the right to make, from time to time, such departures from the detail specifications as may be required to permit improvements in the performance, reliability, or manufacturability of its products. Therefore, the user is cautioned to verify that the information in this publication is current before placing any order.*

*When using the products described herein, the applicability and suitability of such products for the intended purpose shall be reviewed at the users responsibility.*

*Although Sanken undertakes to enhance the quality and reliability of its products, the occurrence of failure and defect of semiconductor products at a certain rate is inevitable.*

*Users of Sanken products are requested to take, at their own risk, preventative measures including safety design of the equipment or systems against any possible injury, death, fires or damages to society due to device failure or malfunction.*

*Sanken products listed in this publication are designed and intended for use as components in general-purpose electronic equipment or apparatus (home appliances, office equipment, telecommunication equipment, measuring equipment, etc.). Their use in any application requiring radiation hardness assurance (e.g., aerospace equipment) is not supported.*

*When considering the use of Sanken products in applications where higher reliability is required (transportation equipment and its control systems or equipment, fire- or burglar-alarm systems, various safety devices, etc.), contact a company sales representative to discuss and obtain written confirmation of your specifications.*

*The use of Sanken products without the written consent of Sanken in applications where extremely high reliability is required (aerospace equipment, nuclear power-control stations, life-support systems, etc.) is strictly prohibited.*

*The information included herein is believed to be accurate and reliable. Application and operation examples described in this publication are given for reference only and Sanken and Allegro assume no responsibility for any infringement of industrial property rights, intellectual property rights, or any other rights of Sanken or Allegro or any third party that may result from its use.*