Linear Regulators

SI-3018KM

Data Sheet 27468.19

1 A, Low-Dropout, 1.8 V Regulator

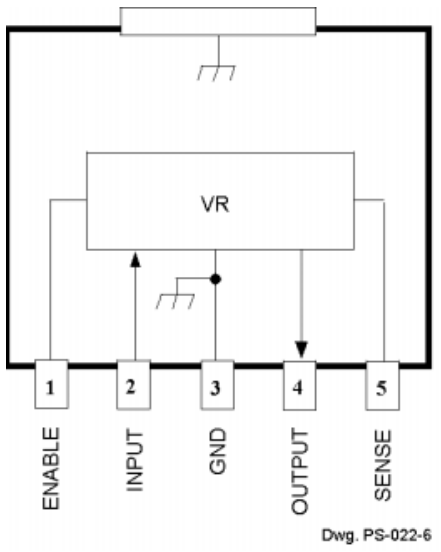

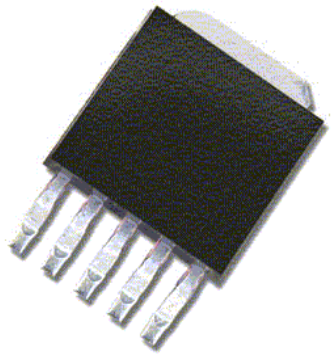

ABSOLUTE MAXIMUM RATINGS

Input Voltage, V_I . . . . . **17 V**

Output Current, I_O . . . . . **1 A***

Enable Input Voltage, V_E . . . . . **V_I**

Junction Temperature, T_J . . . . **+125°C**

Storage Temperature Range, T_S . . . . . **-30°C to +125°C**

* Output current rating is limited by input voltage, duty cycle, and ambient temperature. Under any set of conditions, do not exceed a junction temperature of +125°C.

Designed to meet the high-current requirements in industrial and consumer applications; embedded core, memory, or logic supplies; TVs, VCRs, and office equipment, the SI-3018KM voltage regulator offers the reduced dropout voltage and low quiescent current essential for improved efficiency. This device delivers a regulated output at up to 1 A. Integrated thermal and overcurrent protection enhance overall system reliability. Devices with other output voltages are also available.

Quiescent current does not increase significantly as the dropout voltage is approached, an ideal feature in standby/resume power systems where data integrity is crucial. Regulator accuracy and excellent temperature characteristics are provided by a bandgap reference. An LS-TTL/CMOS-compatible input gives the designer complete control over power up, standby, or power down. A pnp pass element provides a dropout voltage of less than 600 mV at 1 A of load current. Low output voltages eliminate the need for expensive PWM buck converters. The low dropout voltage permits more efficient regulation before output regulation is lost.

This device is supplied in a 5-lead TO-252 style surface-mount plastic package with ground tab to provide a low-resistance path for maximum heat dissipation.

FEATURES

- 1 A Output Current at 1.8 V
- 0.6 V Maximum Dropout Voltage at I_O = 1 A
- Fast Transient Response
- 1 µA Maximum Standby Current
- Remote Voltage Sensing
- Foldback Current Limiting
- Ground Tab for Superior Heat Dissipation
- Thermal Protection

APPLICATIONS

- TVs, VCRs, Electronic Games
- Embedded Core, Memory, or Logic Supplies
- Printers and Other Office Equipment
- Industrial Machinery
- Secondary-Side Stabilization of Multi-Output SMPS

Always order by complete part number, e.g., **SI-3018KM-TL** , where “-TL” indicates tape and reel.

FUNCTIONAL BLOCK DIAGRAM

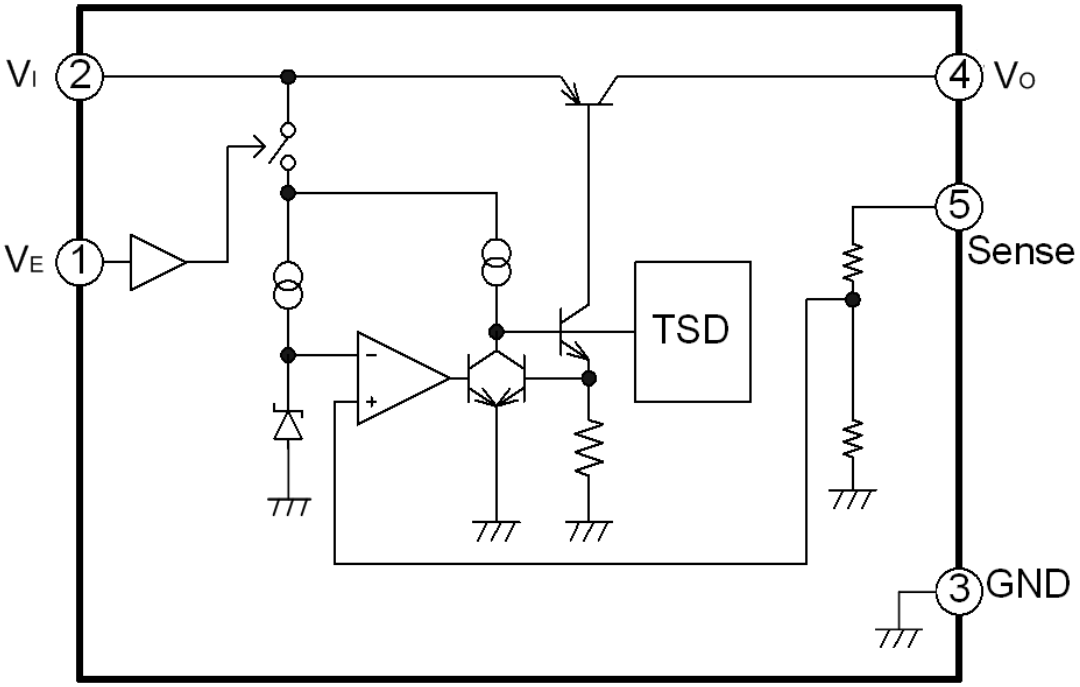

Allowable Package Power Dissipation

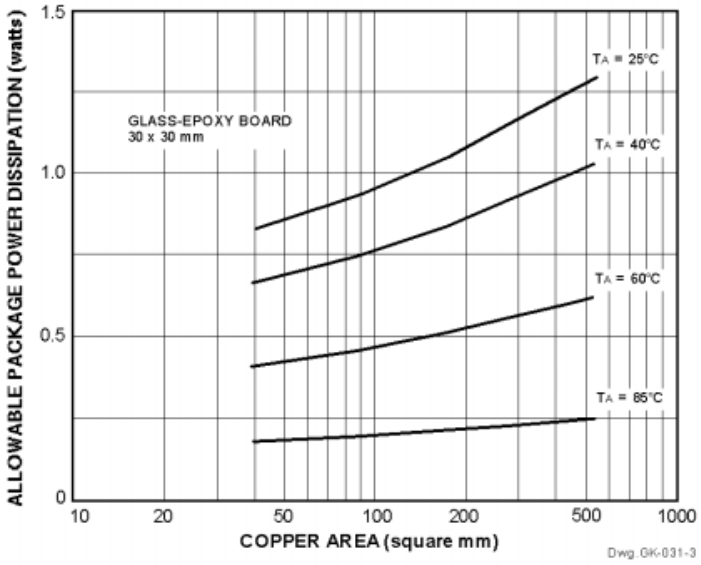

Recommended Operating Conditions

	Min	Max	Units
DC Output Current	0	1	A
Operating Ambient Temp.	-30	+100	°C
Operating Junction Temp.	-20	+100	°C

This data sheet is based on Sanken data sheet SSJ-02296

Allegro MicroSystems, Inc.
115 Northeast Cutoff, Box 15036
Worcester, Massachusetts 01615-0036
Copyright © 2004 Allegro MicroSystems, Inc.

Sanken

ELECTRICAL CHARACTERISTICS at T_A = +25°C, V_E = 2 V (unless otherwise noted).

Characteristic	Symbol	Test Conditions	Limits			
			Min.	Typ.	Max.	Units
Output Voltage	V_O	V_I = 2.5 V, I_O = 10 mA	1.764	1.800	1.836	V
	$V_{O(off)}$	V_E = 0 V	—	—	0.5	V
Output Volt. Temp. Coeff.	a_{VO}	0°C ≤ T_J ≤ 100°C	—	±0.3	—	mV/°C
Output Short-Circuit Current	I_{OM}	V_I = 2.5 V, See note	1.1	—	—	A
Line Regulation	$\Delta V_{O(\Delta VI)}$	V_I = 2.5 V ~ 6 V, I_O = 10 mA	—	—	15	mV
Load Regulation	$\Delta V_{O(\Delta IO)}$	V_I = 2.5 V, I_O = 0 A ~ 1.0 A	—	—	40	mV
Dropout Voltage	V_{Imin} - V_O	I_O = 0.5 A	—	—	0.6	V
		I_O = 1.0 A	—	—	0.6	V
Ground Terminal Current	I_{GND}	V_I = 2.5 V, I_O = 0 mA, V_E = 2.0 V	—	—	350	µA
		V_I = 2.5 V, V_E = 0 V	—	—	1.0	µA
Enable Input Voltage	V_{EH}	Output ON	2.0	—	—	V
	V_{EL}	Output OFF	—	—	0.8	V
Enable Input Current	I_{EH}	V_E = 2.0 V	—	—	40	µA
	I_{EL}	V_E = 0 V	—	0	-5.0	µA
Ripple Rejection Ratio	PSRR	V_I = 2.5 V, 100 Hz ≤ f ≤ 120 Hz	—	55	—	dB
Thermal Shutdown	T_J	I_O = 10 mA	135	150	—	°C

Typical values are given for circuit design information only.

Note: Output short-circuit current is at point where output voltage has decreased 5%.

TYPICAL CHARACTERISTICS

(V_I = 2.5 V, T_A = 25°C)

■ Dropout Voltage

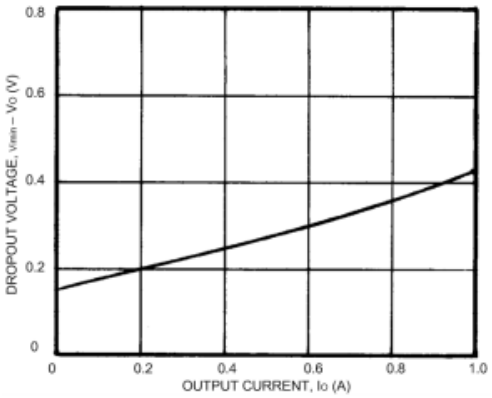

■ Low-Voltage Behavior

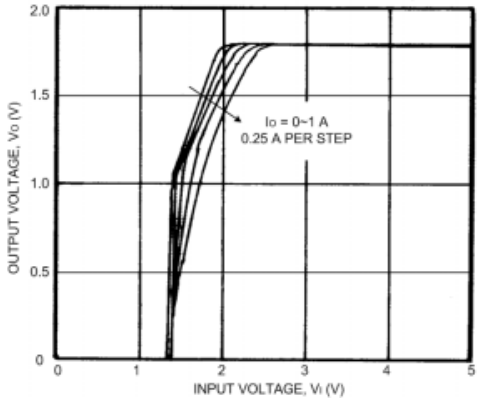

■ GND Pin Current

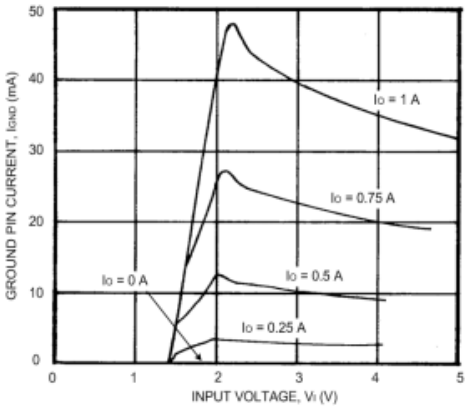

■ Line Regulation

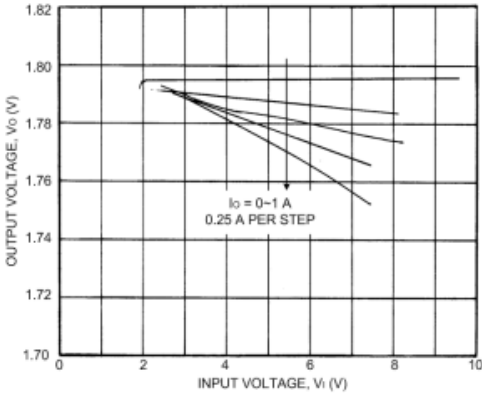

■ Load Regulation

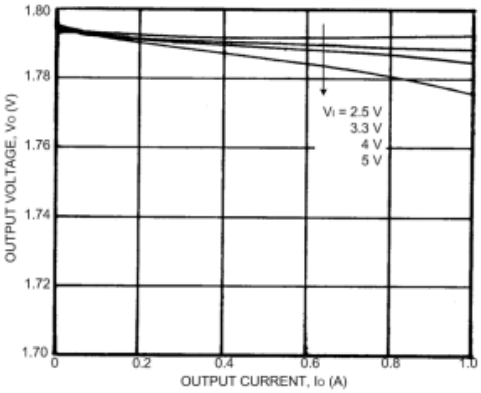

■ Overcurrent Protection

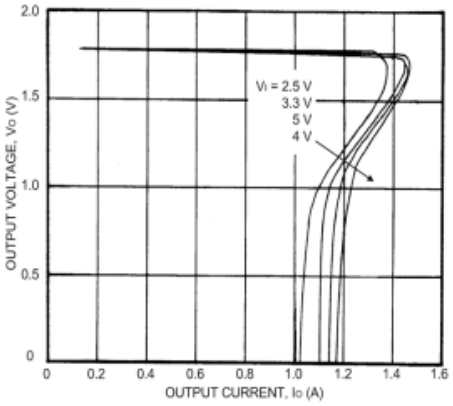

■ ENABLE Control Voltage

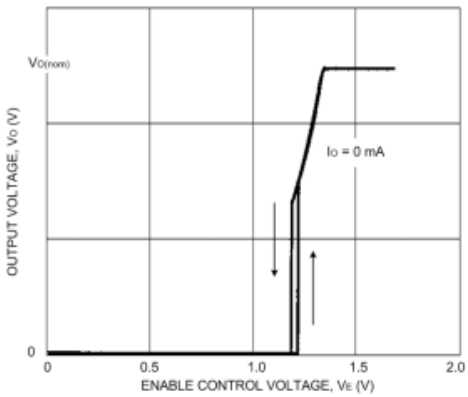

■ ENABLE Control Current

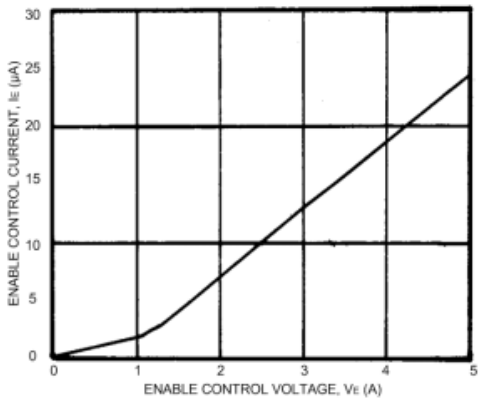

■ Thermal Protection

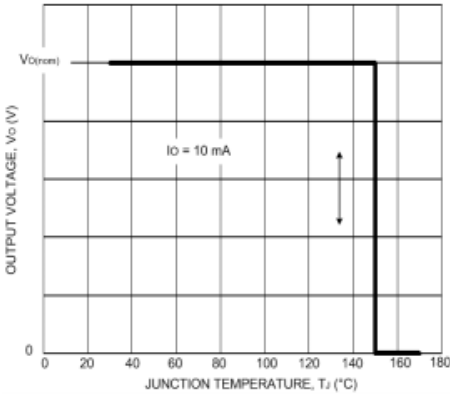

Allegro MicroSystems, Inc.
115 Northeast Cutoff, Box 15036
Worcester, Massachusetts 01615-0036
SanKen

TYPICAL CHARACTERISTICS (cont.)

(V_I = 2.5 V, T_A = 25°C)

■ GND Pin Current

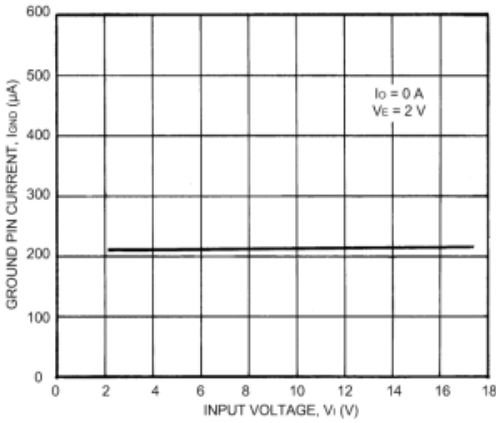

APPLICATIONS INFORMATION

Input Capacitor (C_I, ≥22 μF). This is necessary either when the input line includes inductance or when the wiring is long.

Output Capacitor (C_O, ≥22 μF). This device is designed for use with a very low ESR output capacitor such as a ceramic capacitor. Output oscillation may occur with an aluminum capacitor at low temperatures.

ENABLE Input. The ENABLE (control) input features an internal pull-down resistor. Leaving this input open causes the output to turn off.

Parallel Operation. Parallel operation to increase load current is not permitted.

Increased Output Voltage. The output voltage (V_O) may be increased by inserting a resistor (R_{EXT}) between SENSE and OUTPUT. The current flowing into SENSE is typically 90 μA ±30%. To minimize the effect of I_{SENSE} and temperature on R_{EXT}, it is recommended that a 7.5 kΩ resistor be added between SENSE and GND to increase the current in R_{EXT}. The value of R_{EXT} is then

$$R_{EXT} = (V_O - 1.8) \times 10^6/290$$

APPLICATIONS INFORMATION (cont.)

Determination of DC Input Voltage. The minimum input voltage V_I(min) should be higher than the sum of the fixed output voltage and the maximum rated dropout voltage.

Overcurrent Protection. The SI-3000KM series has a built-in fold-back type overcurrent protection circuit, which limits the output current at a start-up mode. It thus cannot be used in applications that require current at the start-up mode such as:
(1) constant-current load,
(2) power supply with positive and negative outputs to common load (a center-tap type power supply), or
(3) raising the output voltage by putting a diode or a resistor between the device ground and system ground.

Thermal Protection. Circuitry turns off the pass transistor when the junction temperature rises above 135°C. It is intended only to protect the device from failures due to excessive junction temperatures and should not imply that output short circuits or continuous overloads are permitted.

Heat Radiation and Reliability. The reliability of the IC is directly related to the junction temperature (T_J) in its operation. Accordingly, careful consideration should be given to heat dissipation.

The inner frame on which the integrated circuit is mounted is connected to the GND terminal (pin 3). Therefore, it is very effective for heat radiation to enlarge the copper area that is connected to the GND terminal. The graph illustrates the effect of the copper area on the junction-to-ambient thermal resistance ($R_{\theta JA}$).

The junction temperature (T_J) can be determined from either of the following equations:

$$T_J = (P_D \times R_{\theta JA}) + T_A$$

or

$$T_J = (P_D \times R_{\theta JT}) + T_T$$

where $P_D = I_O \times (V_I - V_O)$ and
$R_{\theta JT} = 6°C/W$.

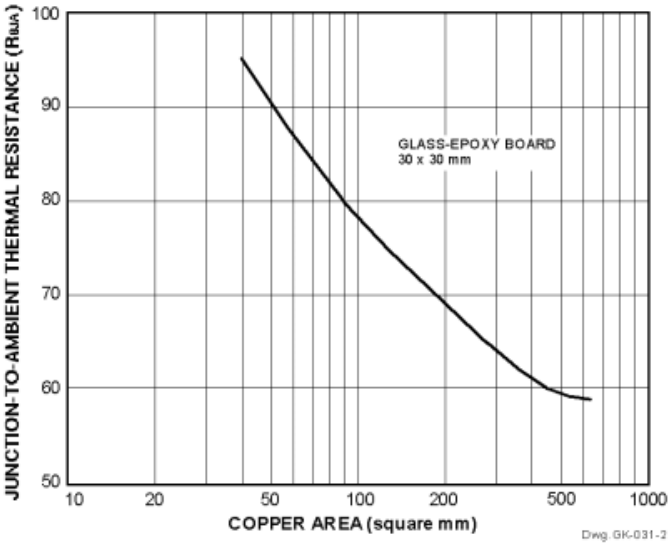

Allegro MicroSystems, Inc.
115 Northeast Cutoff, Box 15036
Worcester, Massachusetts 01615-0036
SanKen

Dimensions in Millimeters

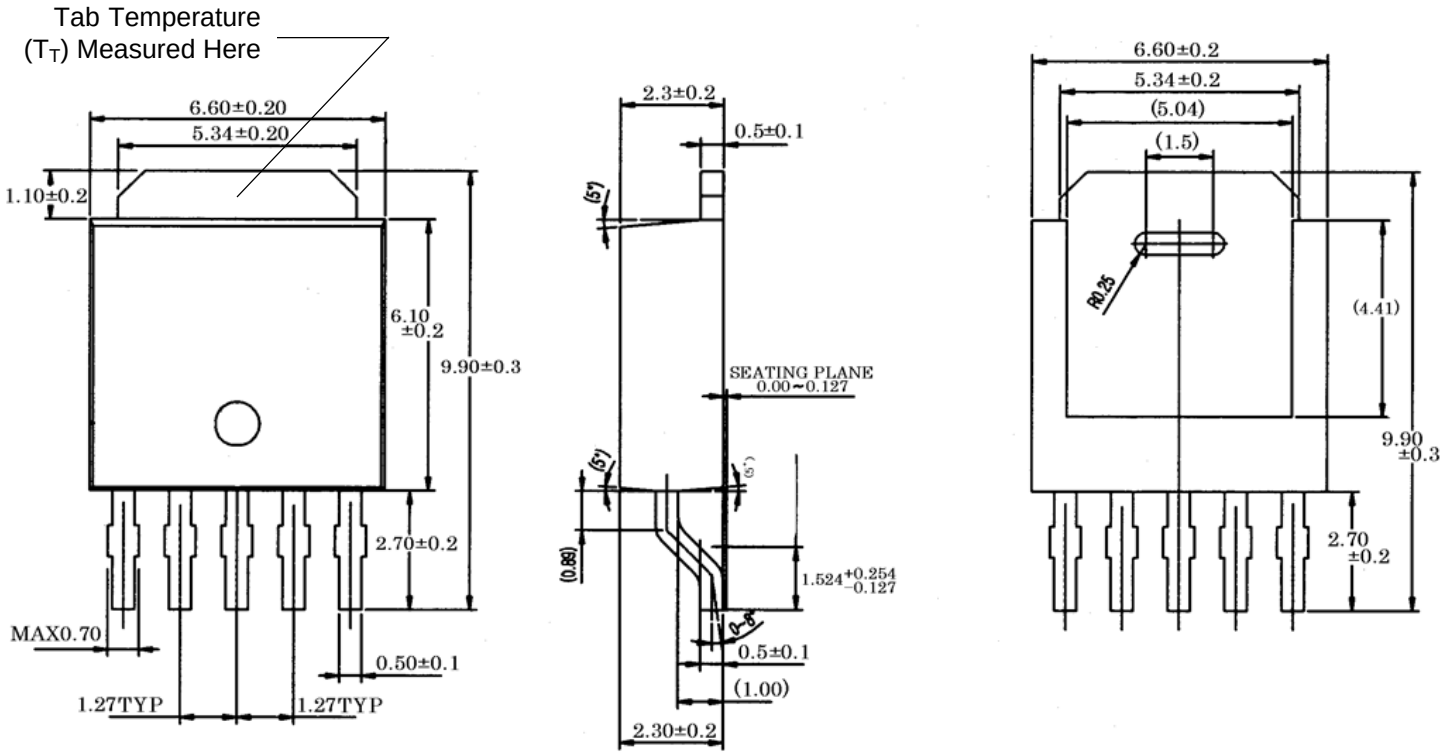

Recommended Land Pattern

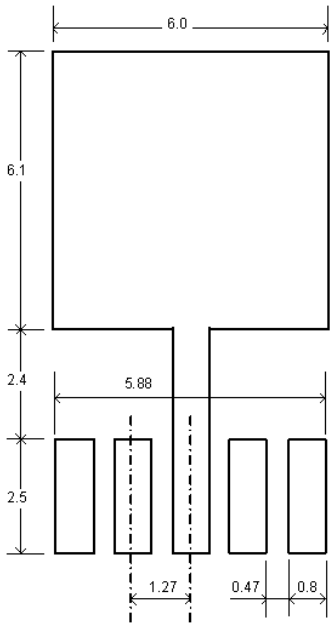

Terminal Finish: Pure Sn (category e3)

Product Weight: Approx. 0.33 g

3000 pieces per reel.

Tape and Reel Dimensions in Millimeters

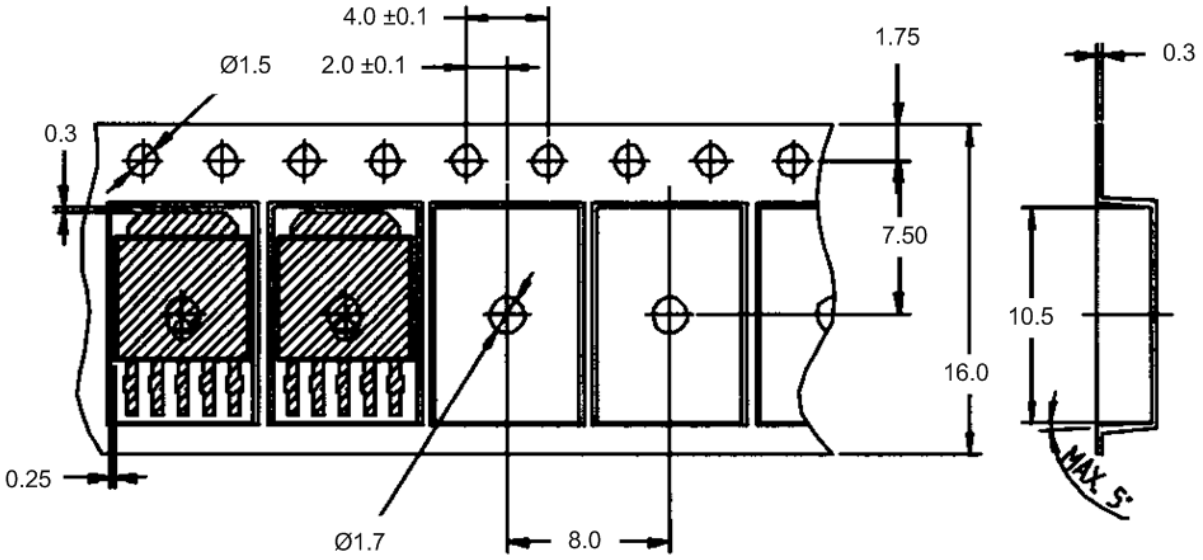

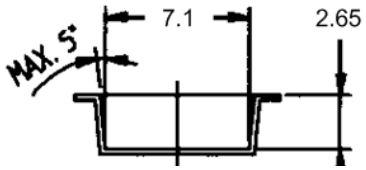

W1: 16.4 +2/-0 mm
W2: 22.4 mm Max.
W3: 16.4 +3/-0.5 mm

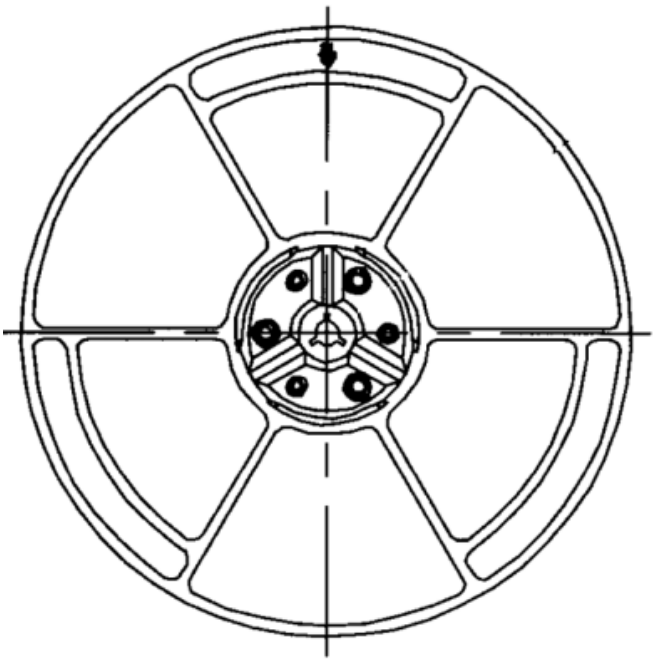

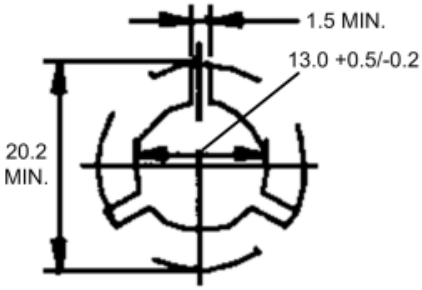

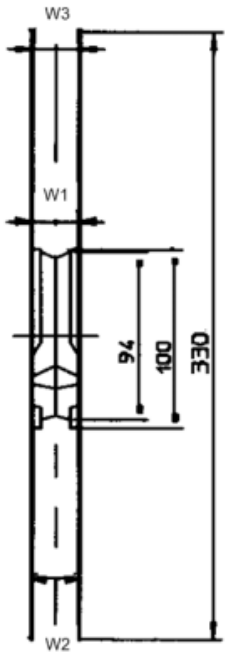

Allegro MicroSystems, Inc.
115 Northeast Cutoff, Box 15036
Worcester, Massachusetts 01615-0036
SanKen

The products described herein are manufactured in Japan by Sanken Electric Co., Ltd. for sale by Allegro MicroSystems, Inc.

Sanken and Allegro reserve the right to make, from time to time, such departures from the detail specifications as may be required to permit improvements in the performance, reliability, or manufacturability of its products. Therefore, the user is cautioned to verify that the information in this publication is current before placing any order.

When using the products described herein, the applicability and suitability of such products for the intended purpose shall be reviewed at the users responsibility.

Although Sanken undertakes to enhance the quality and reliability of its products, the occurrence of failure and defect of semiconductor products at a certain rate is inevitable.

Users of Sanken products are requested to take, at their own risk, preventative measures including safety design of the equipment or systems against any possible injury, death, fires or damages to society due to device failure or malfunction.

Sanken products listed in this publication are designed and intended for use as components in general-purpose electronic equipment or apparatus (home appliances, office equipment, telecommunication equipment, measuring equipment, etc.). Their use in any application requiring radiation hardness assurance (e.g., aerospace equipment) is not supported.

When considering the use of Sanken products in applications where higher reliability is required (transportation equipment and its control systems or equipment, fire- or burglar-alarm systems, various safety devices, etc.), contact a company sales representative to discuss and obtain written confirmation of your specifications.

The use of Sanken products without the written consent of Sanken in applications where extremely high reliability is required (aerospace equipment, nuclear power-control stations, life-support systems, etc.) is strictly prohibited.

The information included herein is believed to be accurate and reliable. Application and operation examples described in this publication are given for reference only and Sanken and Allegro assume no responsibility for any infringement of industrial property rights, intellectual property rights, or any other rights of Sanken or Allegro or any third party that may result from its use.