SI-3000KD Series Surface-Mount, Low Current Consumption, Low Dropout Voltage

■Features

- Compact surface-mount package (TO263-5)
- Output current: 1.0A
- Low dropout voltage: V_{DIF} ≤ 0.6V (at I_O = 1.0A)
- Low circuit current consumption: Iq ≤ 350 μA (600 μA for SI-3010KD, SI-3050KD)
- Low circuit current at output OFF: Iq (OFF) ≤ 1 μA
- Built-in overcurrent, thermal protection circuits
- Compatible with low ESR capacitors (SI-3012KD and SI-3033KD)

■Absolute Maximum Ratings

(T_a=25°C)

Parameter	Symbol	Ratings		Unit
		SI-3012KD/3033KD	SI-3010KD/3050KD	
DC Input Voltage	V_{IN}	17	35*1	V
DC Output Current	I_O	1.0		A
Power Dissipation	P_D*2	3		W
Junction Temperature	T_j	–30 to +125		°C
Storage Temperature	T_{stg}	–30 to +125		°C
Thermal Resistance (Junction to Ambient Air)	$\theta_{j\text{-}a}$	33.3		°C/W
Thermal Resistance (Junction to Case)	$\theta_{j\text{-}c}$	3		°C/W

*1: A built-in input-overvoltage-protection circuit shuts down the output voltage at the Input Overvoltage Shutdown Voltage of the electrical characteristics.

*2: When mounted on glass-epoxy board of 1600mm^2 (copper laminate area 100%).

■Applications

- Secondary stabilized power supply (local power supply)

■Electrical Characteristics 1 (Low Input Voltage type compatible with low ESR output capacitor)

(T_a=25°C, V_C=2V, unless otherwise specified)

Parameter		Symbol	Ratings						Unit
			SI-3012KD (Variable type)			SI-3033KD			
			min.	typ.	max.	min.	typ.	max.	
Input Voltage		V_{IN}	2.4*3		*4	*3		*4	V
Output Voltage (Reference Voltage for SI-3012KD)		V_O (V_{ADJ})	1.24	1.28	1.32	3.234	3.300	3.366	V
		Conditions	V_{IN}=3.3V, I_O=10mA			V_{IN}=5V, I_O=10mA			
Line Regulation		ΔV_{OLINE}			15			15	mV
		Conditions	V_{IN}=3.3 to 8V, I_O=10mA (V_O=2.5V)			V_{IN}=5 to 10V, I_O=10mA			
Load Regulation		ΔV_{OLOAD}			40			50	mV
		Conditions	V_{IN}=3.3V, I_O=0 to 1A (V_O=2.5V)			V_{IN}=5V, I_O=0 to 1A			
Dropout Voltage		V_{DIF}			0.4			0.4	V
		Conditions	I_O=0.5A (V_O=2.5V)			I_O=0.5A			
					0.6			0.6	
		Conditions	I_O=1A (V_O=2.5V)			I_O=1A			
Quiescent Circuit Current		I_q			350			350	μA
		Conditions	V_{IN}=3.3V, I_O=0A, V_C=2V, R2=2.4kΩ			V_{IN}=5V, I_O=0A, V_C=2V			
Circuit Current at Output OFF		I_q (OFF)			1			1	μA
		Conditions	V_{IN}=3.3V, V_C=0V			V_{IN}=5V, V_C=0V			
Temperature Coefficient of Output Voltage		$\Delta V_O/\Delta T_a$		±0.3			±0.3		mV/°C
		Conditions	T_j=0 to 100°C (V_O=2.5V)			T_j=0 to 100°C			
Ripple Rejection		R_{REJ}		55			55		dB
		Conditions	V_{IN}=3.3V, f=100 to 120Hz, I_O=0.1A (V_O=2.5V)			V_{IN}=5V, f=100 to 120Hz, I_O=0.1A			
Overcurrent Protection Starting Current*1		I_{S1}	1.1			1.1			A
		Conditions	V_{IN}=3.3V			V_{IN}=5V			
V_C Terminal	Control Voltage (Output ON)*2	V_C, IH	2			2			V
	Control Voltage (Output OFF)	V_C, IL			0.8			0.8	
	Control Current (Output ON)	I_C, IH			40			40	μA
		Conditions	V_C=2V			V_C=2V			
	Control Current (Output OFF)	I_C, IL	–5	0		–5	0		μA
		Conditions	V_C=0V			V_C=0V			

*1: I_{S1} is specified at the 5% drop point of output voltage V_O under the condition of Output Voltage parameter.

*2: Output is OFF when the output control terminal (V_C terminal) is open. Each input level is equivalent to LS-TTL level. Therefore, the device can be driven directly by LS-TTLs.

*3: Refer to the Dropout Voltage parameter.

*4: V_{IN} (max) and I_O (max) are restricted by the relation $P_D = (V_{IN} - V_O) \times I_O$. Please calculate these values referring to the Copper laminate area vs. Power dissipation data.

■Electrical Characteristics 2 (High Input Voltage Type)

Parameter		Symbol	Ratings						Unit
			SI-3010KD (Variable type)			SI-3050KD			
			min.	typ.	max.	min.	typ.	max.	
Input Voltage		V_{IN}	2.4[*1]		27[*5]	[*1]		15[*5]	V
Output Voltage (Reference Voltage V_{ADJ} for SI-3010KD)		V_O (V_{ADJ})	0.98	1.00	1.02	4.90	5.00	5.10	V
		Conditions	V_{IN}=7V, I_O=10mA			V_{IN}=7V, I_O=10mA			
Line Regulation		ΔV_{OLINE}			30			30	mV
		Conditions	V_{IN}=6 to 11V, I_O=10mA (V_O=5V)			V_{IN}=6 to 11V, I_O=10mA			
Load Regulation		ΔV_{OLOAD}			75			75	mV
		Conditions	V_{IN}=7V, I_O=0 to 1A (V_O=5V)			V_{IN}=7V, I_O=0 to 1A			
Dropout Voltage		V_{DIF}			0.3			0.3	V
		Conditions	I_O=0.5A (V_O=5V)			I_O=0.5A			
					0.6			0.6	
		Conditions	I_O=1A (V_O=5V)			I_O=1A			
Quiescent Circuit Current		I_q			600			600	μA
		Conditions	V_{IN}=7V, I_O=0A, V_C=2V R2=10kΩ			V_{IN}=7V, I_O=0A, V_C=2V			
Circuit Current at Output OFF		I_q (OFF)			1			1	μA
		Conditions	V_{IN}=7V, V_C=0V			V_{IN}=7V, V_C=0V			
Temperature Coefficient of Output Voltage		$\Delta V_O/\Delta T_a$		±0.5			±0.5		mV/°C
		Conditions	T_j=0 to 100°C (V_O=5V)			T_j=0 to 100°C			
Ripple Rejection		R_{REJ}		75			75		dB
		Conditions	V_{IN}=7V, f=100 to 120Hz, I_O=0.1A (V_O=5V)			V_{IN}=7V, f=100 to 120Hz, I_O=0.1A			
Overcurrent Protection Starting Current[*2] [*4]		I_{S1}	1.1			1.1			A
		Conditions	V_{IN}=7V			V_{IN}=7V			
V_C Terminal	Control Voltage (Output ON)[*3]	V_C, IH	2.0			2.0			V
	Control Voltage (Output OFF)[*3]	V_C, IL			0.8			0.8	
	Control Current (Output ON)	I_C, IH			40			40	μA
		Conditions	V_C=2V			V_C=2V			
	Control Current (Output OFF)	I_C, IL	–5	0		–5	0		μA
		Conditions	V_C=0V			V_C=0V			
Input Overvoltage Shutdown Voltage		V_{OVP}	33			26			V
		Conditions	I_O=10mA			I_O=10mA			

*1: Refer to the Dropout Voltage parameter.
*2: I_{S1} is specified at the 5% drop point of output voltage V_O under the condition of Output Voltage parameter.
*3: Output is OFF when the output control terminal (V_C terminal) is open. Each input level is equivalent to LS-TTL level. Therefore, the device can be driven directly by LS-TTLs.
*4: SI-3010KD, SI-3050KD, cannot be used in the following applications because the built-in foldback-type overcurrent protection may cause errors during start-up stage.
(1) Constant current load (2) Positive and negative power supply (3) Series-connected power supply (4) V_O adjustment by raising ground voltage
*5: V_{IN} (max) and I_O (max) are restricted by the relation P_D = (V_{IN} - V_O) × I_O. Please calculate these values referring to the Copper laminate area vs. Power dissipation data as shown hereinafter.

■External Dimensions (TO263-5)

(unit : mm)

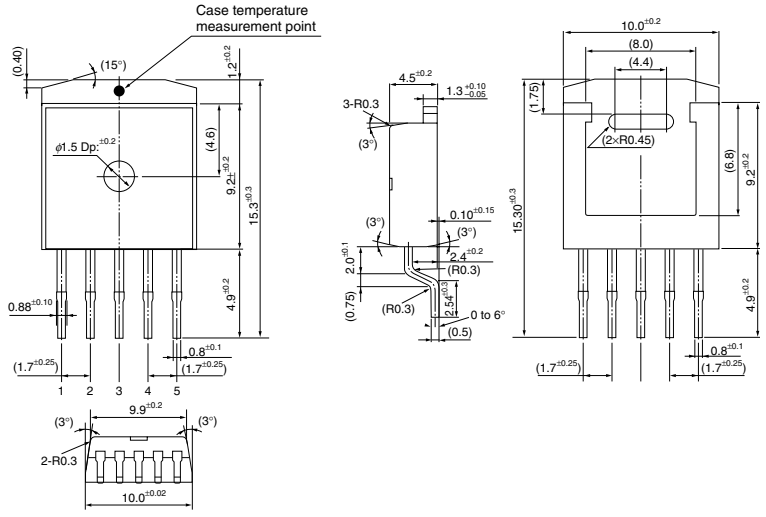

Pin Assignment
① V_C
② V_{IN}
③ GND (Common to the rear side of product)
④ V_O
⑤ Sense
(ADJ for SI-3010KD/3012KD)

Plastic Mold Package Type
Flammability: UL94V-0
Product Mass: Approx. 1.48g

■Block Diagram

●SI-3010KD/SI-3012KD

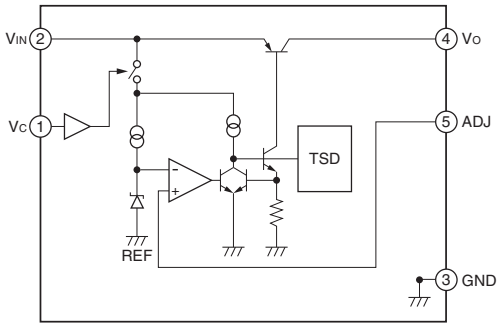

●SI-3033KD/SI-3050KD

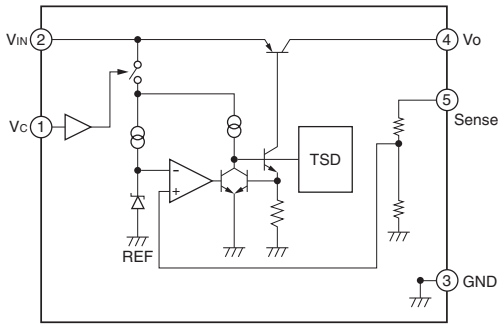

■Typical Connection Diagram

●SI-3033KD/SI-3050KD

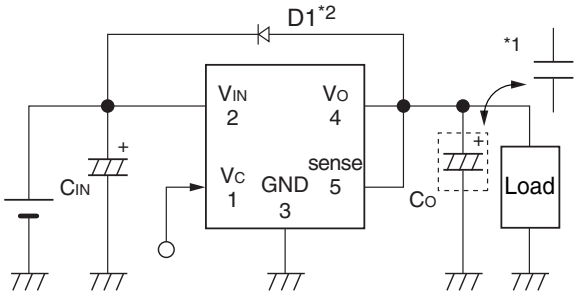

●SI-3010KD/SI-3012KD

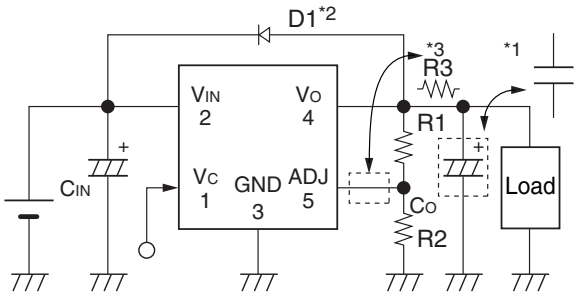

CIN: Input capacitor (22 μF or larger)
CO: Output capacitor

*1: SI-3012KD/3033KD (22 μF or larger)
Co has to be a low ESR capacitor such as a ceramic capacitor.
When using the electrolytic capacitor, oscillation may occur at a low temperature.
SI-3010KD/3050KD/ (47 μF or larger)
If a low ESR capacitor is used, oscillation may occur.

*2: D1: Reverse bias protection diode
This diode is required for protection against reverse biasing between the input and output.
(Sanken SJPL-H2 is recommended.)
This diode is not required at VO ≤ 3.3V.

R1, R2: Output voltage setting resistors
The output voltage can be set by connecting R1 and R2 as shown above.
The recommended value for R2 is 10Ω (24kΩ for SI-3012KD).

$R1=(V_O-V_{ADJ})\div(V_{ADJ}/R2)$

*3: For SI-3010KD, insert R3 in case of setting VO to VO ≤ 1.5V.
The recommended value for R3 is 10kΩ.

■Reference Data

Copper Laminate Area (on Glass-Epoxy Board) vs.
Thermal Resistance (from Junction to Ambient Temperature) (Typical Value)

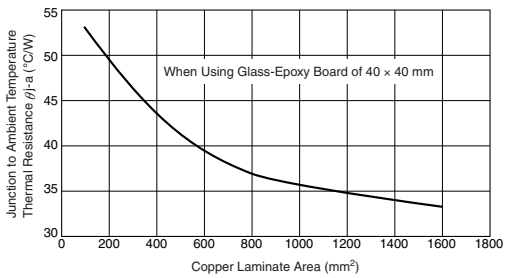

- A higher heat radiation effect can be achieved by enlarging the copper laminate area connected to the inner frame to which a monolithic ICs is mounted.
- Obtaining the junction temperature
  Measure the case temperature TC with a thermocouple, etc. Then, substitute this value in the following formula to obtain the junction temperature.

$T_j=P_D \times \theta_{j-C} + T_C$ ($\theta_{j-C} = 3°C/W$) $P_D= (V_{IN}-V_O)\bullet I_{OUT}$