SI-3000J Series

5-Terminal, Multi-Function, Full-Mold, Low Dropout Voltage Dropper Type

■Features

- Compact full-mold package (equivalent to TO220)
- Output current: 2.0A
- Low dropout voltage: $V_{DIF} \leq 1V$ (at I_O=2.0A)
- Variable output voltage (rise only) May be used for remote sensing
- Output ON/OFF control terminal is compatible with LS-TTL. (It may be directly driven by LS-TTL or standard CMOS logic.)
- Built-in foldback overcurrent, overvoltage, thermal protection circuits

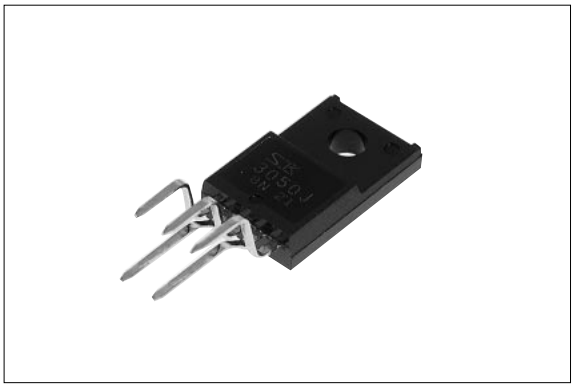

■Applications

- For stabilization of the secondary stage of switching power supplies
- Electronic equipment

■Absolute Maximum Ratings

(T_a=25°C)

Parameter	Symbol	Ratings			Unit
		SI-3050J	SI-3090J	SI-3120J/3150J	
DC Input Voltage	V_{IN}	25	30	35	V
Voltage of Output Control Terminal	V_C	V_{IN}			V
DC Output Current	I_O	2.0*1			A
Power Dissipation	P_{D1}	20(With infinite heatsink)			W
	P_{D2}	1.5(Without heatsink, stand-alone operation)			W
Junction Temperature	T_j	–40 to +125			°C
Ambient Operating Temperature	T_{op}	–30 to +100			°C
Storage Temperature	T_{stg}	–40 to +125			°C
Thermal Resistance (junction to case)	$R_{th(j-c)}$	5.0			°C/W
Thermal Resistance (junction to ambient air)	$R_{th(j-a)}$	66.7(Without heatsink, stand-alone operation)			°C/W

■Electrical Characteristics

(T_a=25°C unless otherwise specified)

Parameter	Symbol	Ratings												Unit
		SI-3050J			SI-3090J			SI-3120J			SI-3150J			
		min.	typ.	max.	min.	typ.	max.	min.	typ.	max.	min.	typ.	max.	
Input Voltage	V_{IN}	6*2		15*1	10*2		25*1	13*2		27*1	16*2		27*1	V
Output Voltage	V_O	4.90	5.00	5.10	8.82	9.00	9.18	11.76	12.00	12.24	14.70	15.00	15.30	V
	Conditions	V_{IN}=8V, I_O=1.0A			V_{IN}=12V, I_O=1.0A			V_{IN}=15V, I_O=1.0A			V_{IN}=18V, I_O=1.0A			
Dropout Voltage	V_{DIF}			0.5			0.5			0.5			0.5	V
	Conditions	I_O≤1.5A												
				1.0			1.0			1.0			1.0	
	Conditions	I_O≤2.0A												
Line Regulation	ΔV_{OLINE}		10	30		18	48		24	64		30	90	mV
	Conditions	V_{IN}=6 to 15V, I_O=1.0A			V_{IN}=10 to 20V, I_O=1.0A			V_{IN}=13 to 25V, I_O=1.0A			V_{IN}=16 to 25V, I_O=1.0A			
Load Regulation	ΔV_{OLOAD}		40	100		70	180		93	240		120	300	mV
	Conditions	V_{IN}=8V, I_O=0 to 2.0A			V_{IN}=12V, I_O=0 to 2.0A			V_{IN}=15V, I_O=0 to 2.0A			V_{IN}=18V, I_O=0 to 2.0A			
Temperature Coefficient of Output Voltage	$\Delta V_O/\Delta T_a$		±0.5			±1.0			±1.5			±1.5		mV/°C
	Conditions	V_{IN}=8V, I_O=5mA, T_j=0 to 100°C			V_{IN}=12V, I_O=5mA, T_j=0 to 100°C			V_{IN}=15V, I_O=5mA, T_j=0 to 100°C			V_{IN}=18V, I_O=5mA, T_j=0 to 100°C			
Ripple Rejection	R_{REJ}		54			54			54			54		dB
	Conditions	V_{IN}=8V, f=100 to 120Hz			V_{IN}=12V, f=100 to 120Hz			V_{IN}=15V, f=100 to 120Hz			V_{IN}=18V, f=100 to 120Hz			
Quiescent Circuit Current	I_q		3	10		3	10		3	10		3	10	mA
	Conditions	V_{IN}=8V, I_O=0A			V_{IN}=12V, I_O=0A			V_{IN}=15V, I_O=0A			V_{IN}=18V, I_O=0A			
	I_q(off)		0.5	1.0		0.5	1.0		0.5	1.0		0.5	1.0	mA
	Conditions	V_{IN}=8V, I_O=0A, V_C=0.4V			V_{IN}=12V, I_O=0A, V_C=0.4V			V_{IN}=15V, I_O=0A, V_C=0.4V			V_{IN}=18V, I_O=0A, V_C=0.4V			
Overcurrent Protection Starting Current*3,5	I_{S1}	2.1			2.1			2.1			2.1			A
	Conditions	V_{IN}=8V			V_{IN}=12V			V_{IN}=15V			V_{IN}=18V			
V_C Terminal*4 Control Voltage (Output ON)	$V_{C.IH}$	2.0			2.0			2.0			2.0			V
V_C Terminal*4 Control Voltage (Output OFF)	$V_{C.IL}$			0.8			0.8			0.8			0.8	V
V_C Terminal*4 Control Current (Output ON)	$I_{C.IH}$			20			20			20			20	μA
	Conditions	V_C=2.7V												
V_C Terminal*4 Control Current (Output OFF)	$I_{C.IL}$			–0.3			–0.3			–0.3			–0.3	mA
	Conditions	V_C=0.4V												

*1: $V_{IN(max)}$ and $I_{O(max)}$ are restricted by the relation $P_{D(max)}=(V_{IN}-V_O)\bullet I_O$=20(W).

*2: Refer to the dropout voltage.(Refer to Setting DC Input Voltage on page 7.)

*3: I_{S1} is specified at –5(%) drop point of output voltage V_O on the condition that $V_{IN}=V_O$+3V, I_O=0.5A.

*4: Output is ON even when output control terminal V_C is open. Each input level is equivalent to LS-TTL. Therefore, it may be directly driven by an LS-TTL circuit.

*5: A foldback type overcurrent protection circuit is built into the IC regulator. Therefore, avoid using it for the following applications as it may cause starting errors:
(1) Constant current load (2) Plus/minus power (3) Series power (4) V_O adjustment by raising ground voltage

■Outline Drawing

(unit:mm)

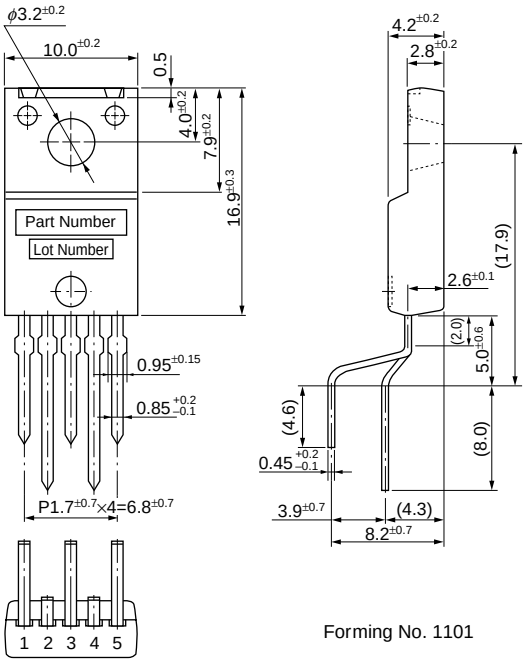

Forming No. 1101

Plastic Mold Package Type
Flammability: UL94V-0
Weight: Approx. 2.3g

① GND
② V_C
③ V_O
④ V_{OS}
⑤ V_{IN}

■Block Diagram

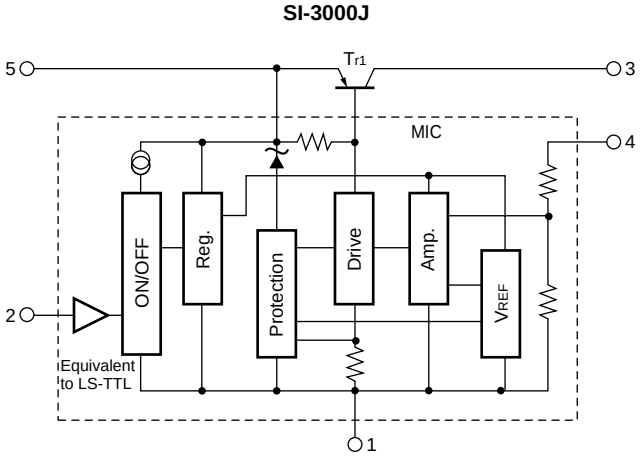

■Standard External Circuit

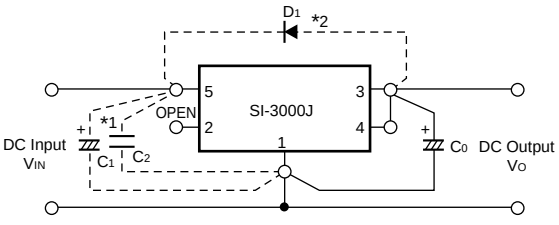

C_0 : Output capacitor (47 to 100μF)
*1 C_1, C_2 : Oscillation prevention capacitor (C_1: Approx. 47μF, C_2: 0.33μF)
These capacitors are required if the input line is inductive and in the case of long wiring. Tantalum capacitors are recommended for C_1 and C_0, particularly at low temperatures.
*2 D_1 : Protection diode
This diode is required for protection against reverse biasing of the input and output. Sanken EU2Z is recommended.

■T_a-P_D Characteristics

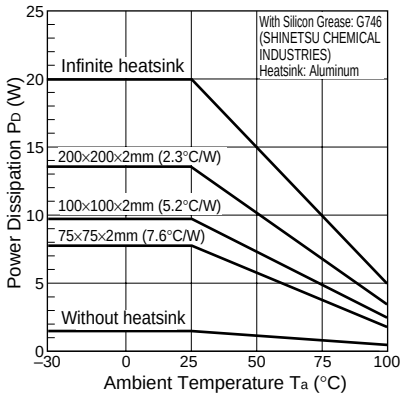

$P_D=I_O \cdot [V_{IN}(mean)-V_O]$

External Variable Output Voltage Circuit

1. Variable output voltage with a single external resistor

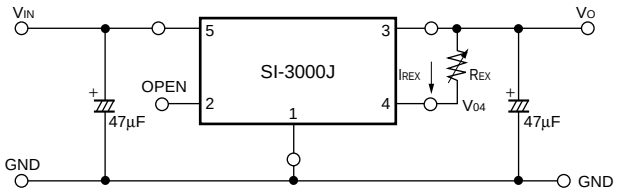

The output voltage may be increased by inserting resistor R_{EX} between terminals No.4 (sensing terminal) and No.3 (output terminal). The current I_{REX} flowing into terminal No.4 is 1mA (typ.), therefore the adjusted output voltage V_{OUT} is:

$V_O=V_{04}+I_{REX}\bullet R_{EX}$ *V_{04}: output voltage of SI-3000J series

However, the built-in resistor (between terminals No. 4 and No.1) is a semiconductor resistor, which has approximately thermal characteristics of +0.2%/°C.

It is important to keep the thermal characteristics in mind when adjusting the output voltage.

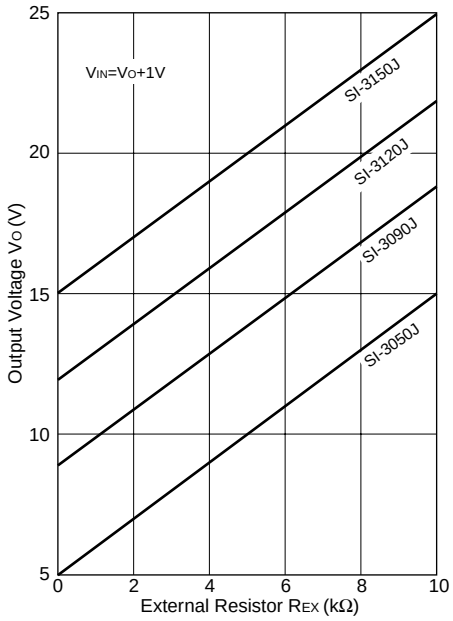

2. Variable output voltage with two external resistors

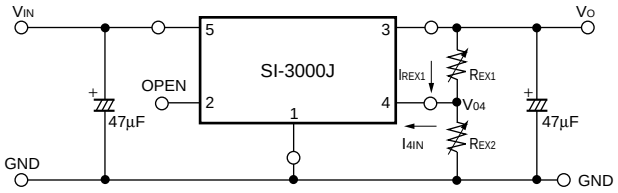

The output voltage may be increased by inserting resistors R_{EX1} between terminals No.4 (sensing terminal) and No.3 (output terminal) and R_{EX2} between terminals No.4 and No.1 (ground terminal).

The current I_{4IN} flowing into terminal No.4 is 1mA (typ.) so the thermal characteristics may be improved compared to the method shown in 1 by setting the external current I_{REX1} at approximately 5 times the value of I_{4IN} (stability coefficient S=5).

The adjusted output voltage V_{OUT} in this case is:

$$\begin{cases} V_O=V_{04}+R_{EX1}\bullet I_{REX1} \\ I_{REX1}=S\bullet I_{4IN} \end{cases}$$

The value of the external resistors may be obtained as follows:

$$R_{EX1}=\frac{V_O-V_{04}}{S\bullet I_{4IN}}, \quad R_{EX2}=\frac{V_{04}}{(S-1)\bullet I_{4IN}}$$

*V_{04}: Output voltage of SI=3000J series

S: Stability coefficient of I_{4IN} (may be set to any value)

Note: In the SI-3000J series, the output voltage increase can be adjusted as mentioned above. However, when the rise is set to approximately 10V compared to output voltage V_{04}, the necessary output current may not be obtained due to the S.O.A. protection circuit in the SI-3000J series.

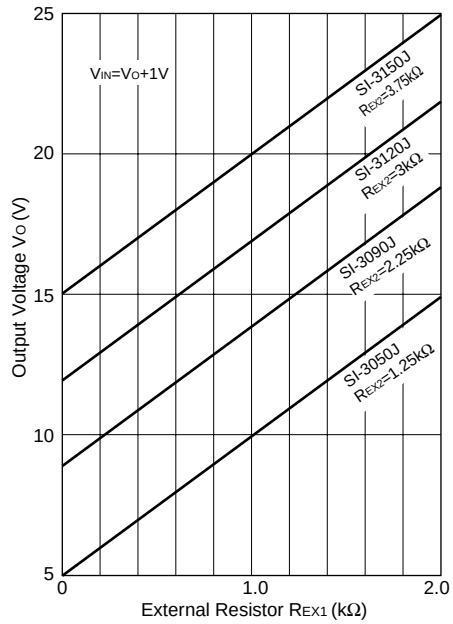

■Typical Characteristics

(Ta=25°C)

Io vs. VDIF Characteristics

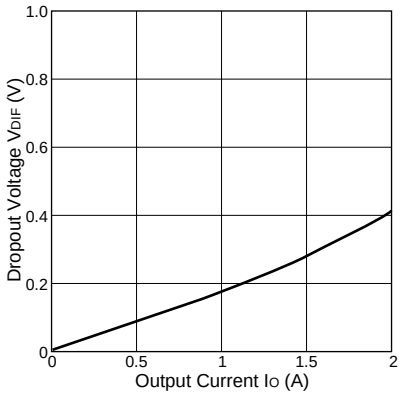

Temperature Coefficient of Output Voltage(SI-3050J)

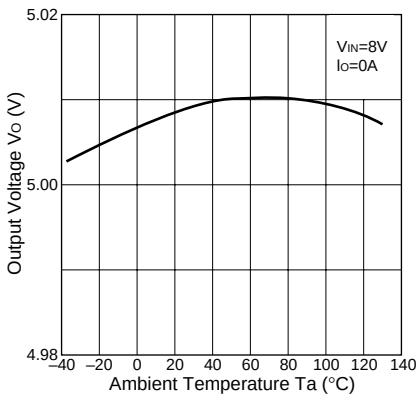

Circuit Current(SI-3050J)

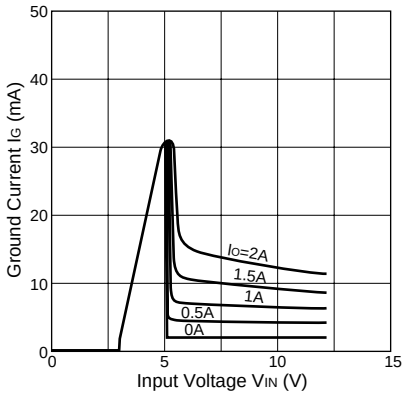

Quiescent Circuit Current(SI-3050J)

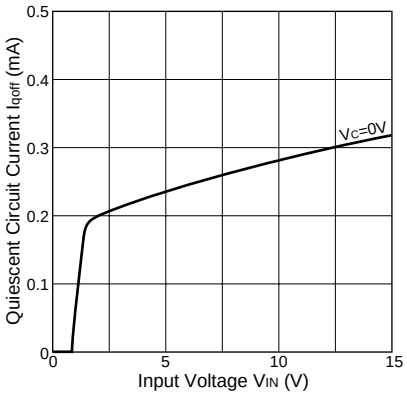

Rise Characteristics(SI-3050J)

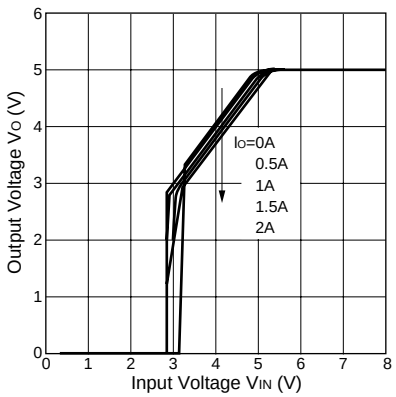

Rise Characteristics(SI-3120J)

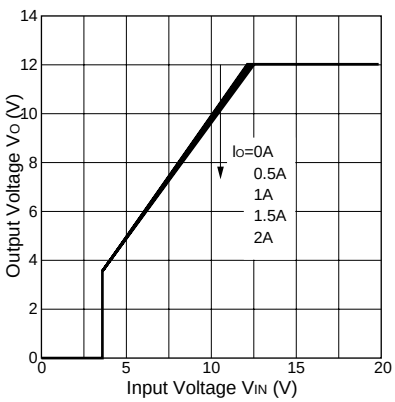

Overcurrent Protection Characteristics(SI-3050J)

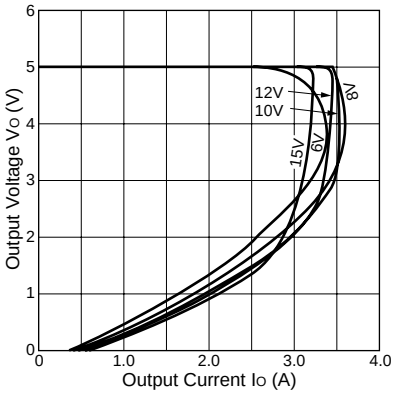

Overcurrent Protection Characteristics(SI-3120J)

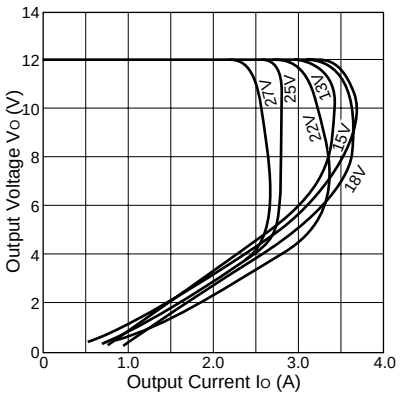

ON/OFF Control Characteristics(SI-3050J)

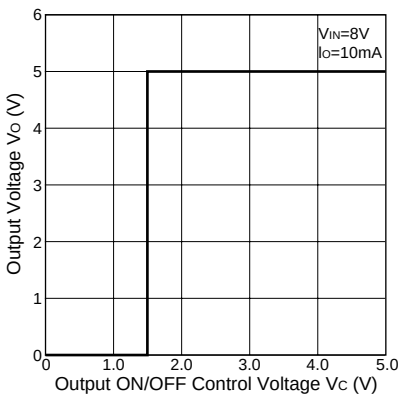

Thermal Protection(CharacteristicsSI-3050J)

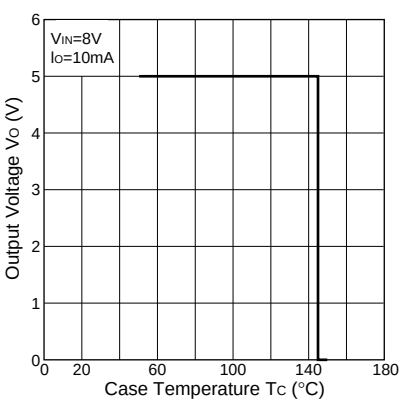

Note on Thermal Protection:

The thermal protection circuit is intended for protection against heat during instantaneous short-circuiting. Its operation is not guaranteed for short-circuiting over extended periods of time.