SHD 54





Performance features

- For opening and closing side-hung vents
- For sash sizes to 1.2 x 1 m
- With motor electronics controlled via microprocessor
- Opening the windows to 65° in less than 30 sec.
- Locking mechanism for the window in conjunction with window locking drive (optional)
- Configurable locking direction on the drive
- Programmable drive functions and different drive parameters
- Bracket set included

Potential drive options

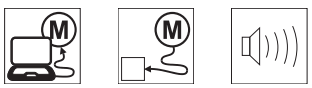

You can find the explanations for the icons on the last page

We reserve the right to make changes.
©2018 D+H Mechatronic AG, Ammersbek

Dimensions

All specifications in mm

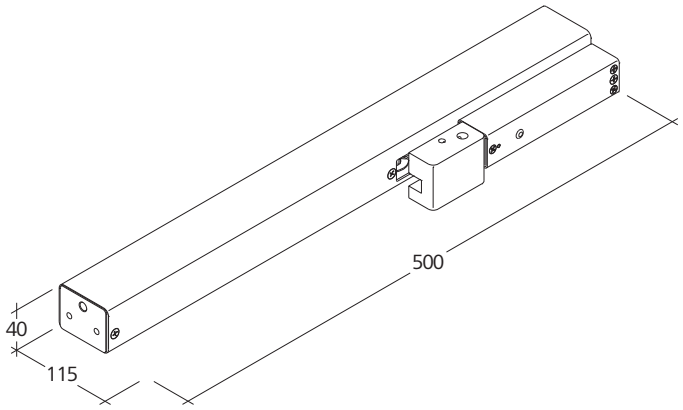

Technical data

Supply	24 V DC / ±15 % / 1 A
Force of pressure	500 N
Tensile force	500 N
Service life	20000 double strokes
OPEN running speed	11.8 mm/s
OPEN running speed - SHEV	15.2 mm/s
CLOSED running speed	11.8 mm/s
Type of protection	IP 50
Emission sound pressure level	LpA ≤ 70 dB(A)
Temperature range	-5 °C ... +75 °C
Fire resistance	B300 (30 min / 300 °C)
Housing	Aluminium
Surface	Powder-coated
Colour	White aluminium (~ RAL 9006)
Connection	2.5 m silicone cable
W x H x D	500 x 40 x 115 mm
Weight	2.10 kg

Approvals / Certificates

Find out about permission details from your D+H Partner

Article also available with the following permissions under other article numbers. Technical data may deviate.

Design

Type	Art. No.	Stroke	Remark
SHD 54/450-V	23.050.70	450 mm	
SHD	26.501.00		Variable equipment possible



HS “High-Speed”

In the case of SHEV, the high-speed function is used for reliably reaching the defined end position in 60 s. In daily ventilation mode, the drive runs quietly and quickly, as usual.



Function programming

Option for customised configuring of drive parameters (e.g. stroke) via software and associated service tools for drives equipped with PLP, BSY or BSY+ electronics.



BRV signal

Acknowledgement from the drive, via a control cable, to confirm that it has been completely extended or retracted. When used with the AT 41 and ERM 44 modules, this signal is sent to the central building control system, the modules themselves, or to the lock drive. The BRV signal is not isolated.



ACB (Advanced Communication Bus)

Enables direct bus communication between the controller and the drive for, for example, control with perfect positioning or drive feedback. Communication is via the open source Modbus protocol, and it enables the drive to be combined with an ACB-capable control panel or enables it to be directly connected to higher-level controllers such as a building management system.



BSY+ (synchronisation of drives)

In addition to providing the same synchronisation function as BSY, BSY+ enables different components in the window to communicate with each other. For example, the chain drives, during synchronous operation, or the window and lock drives (e.g. FRA 11 BSY+ or VLD-BSY+).



SGI signal (position reporting)

In combination with the D+H servo plug-in unit SE 622, the drives can be controlled with perfect positioning.



SKS (closing edge protection)

Drive option, which enables an anti-trap strip or presence detector to be connected directly to the drive (terminal resistor 5.6 kΩ).



Audible signal (corresponding to protection class)

AS2 corresponding to “Protection class 2” in accordance with ZVEI risk assessment through an audible warning signal in the “CLOSED” running direction. AS3 corresponding to “Protection class 3” in accordance with ZVEI risk assessment, in addition to AS2, stops the drive for 11 s with a remaining stroke of 28 mm.



End position message (OPEN / CLOSED)

Drive feedback via an integrated isolated switching contact. This happens if the chain / rack and pinion has moved completely out or in.



Mechanical adjustment

Drive option for adjusting the overall length or design (e.g.: centred chain outlet).



TM tandem connecting shaft

Available as an option for rack and pinion drives. The drives are mechanically coupled with the rack and pinion slave units (ZM) with connecting shafts (VW).



SBD side bow chain

Drive chain with rigid backing, bends in the direction of the hinge. Drive is fixed in place (not rotatable).



SBU side bow chain

Drive chain with rigid backing, bends in the direction of the hinge. Drive is fixed in place (not rotatable).



WS (use in swimming pool)

Available as an option for rack and pinion drives to make them suitable for use in swimming pools. The drive is equipped with an A4 rack and pinion, A4 eyebolt and a gearbox with hardened stainless steel pinion.



W (use outdoors)

Available as an option for rack and pinion drives to make them suitable for outdoor use. The drive is equipped with a pressure release vent (depending on installation), condensation protective coating on the electronics and a gearbox with hardened stainless steel pinion.