SG-MLF DIRECT MOUNT, SOLDERLESS SOCKET FOR TEST APPLICATIONS

Features

- Wide temperature range (-30C to +100C).
- Excellent signal integrity at high frequencies.
- High speed reliable elastomer connection.

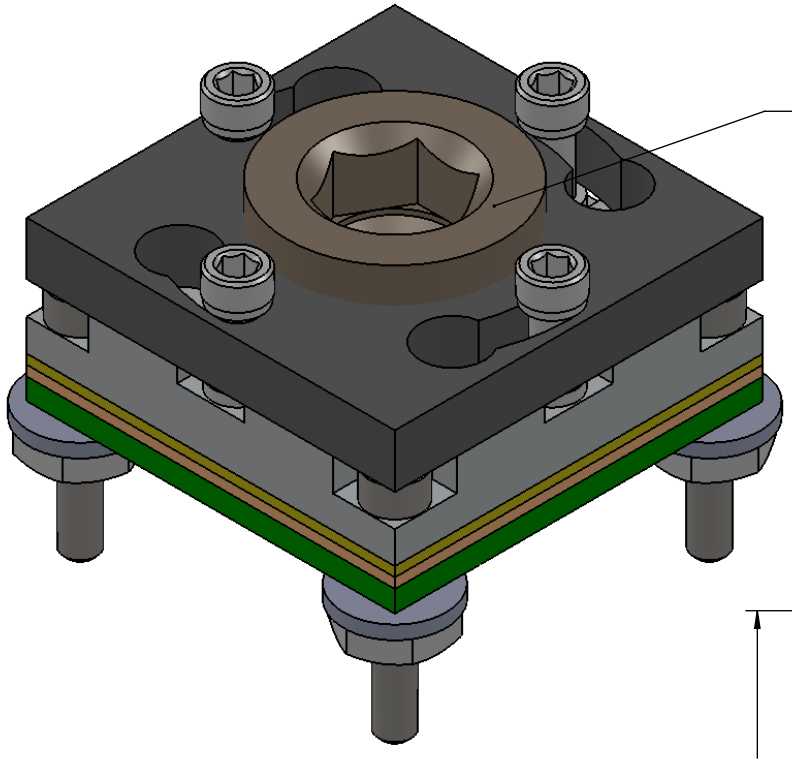

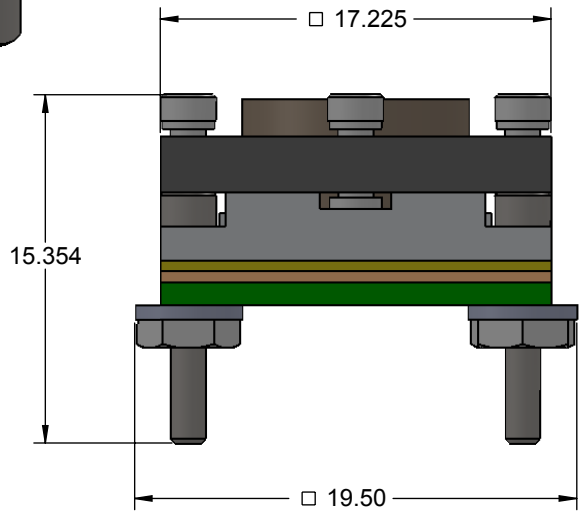

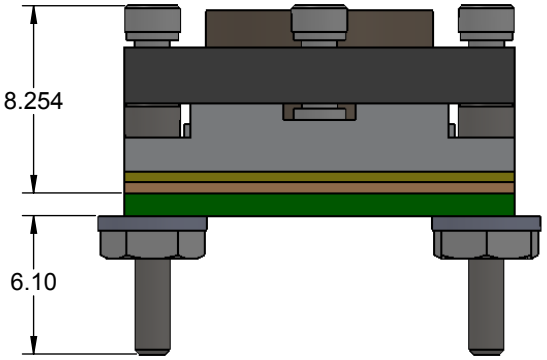

Description: SG-MLF socket

Primary dimension units are millimeters, Secondary dimension units are [inches], Weight is in grams.

Tolerances: Hole diameters ±0.03mm [±0.001"], Pitches (from true position) ±0.025mm [±0.001"], substrate thickness tolerance ±10%, all other tolerances ±0.13mm [±0.005"] unless stated otherwise. Materials and specifications are subject to change without notice.

SG-MLF-7075 Drawing	Material: N/A Finish: N/A Weight: 6.02	STATUS: Released	SHEET: 1 OF 4	REV. B
Ironwood Electronics, Inc. Tele: (800) 404-0204 www.ironwoodelectronics.com		ENG: M.A.Fedde	DRAWN BY: M. Raske	SCALE: 3:1
		FILE: SG-MLF-7075 Dwg	DATE: 3/27/2013	

***Note: QFN pattern is not symmetrical with respect to the mounting holes. It is shifted 0.25mm to right of center.**

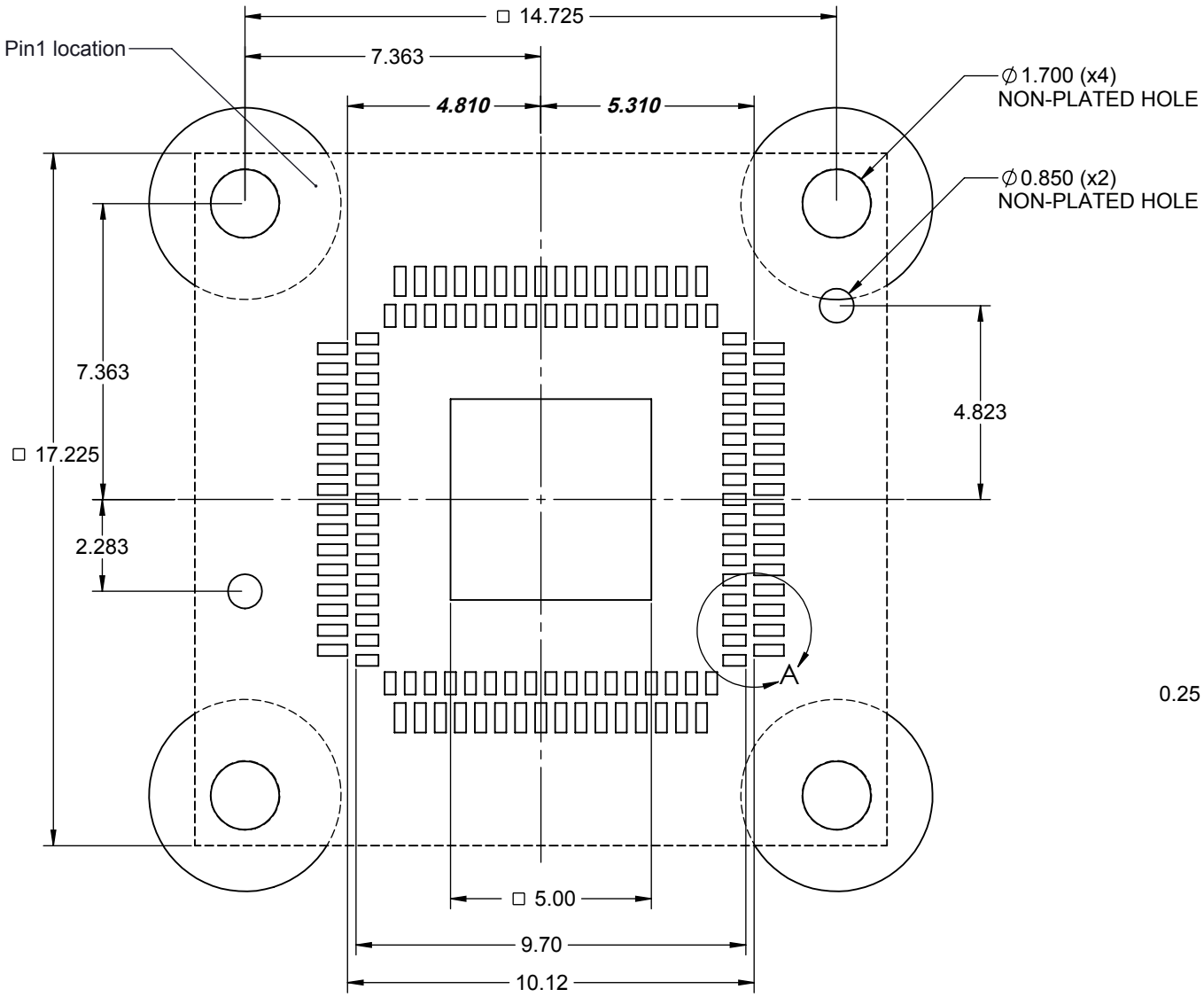

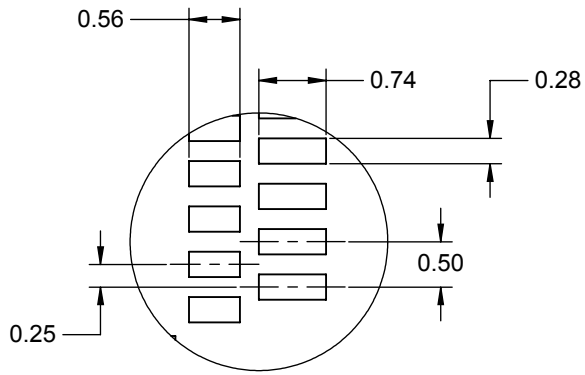

DETAIL A
SCALE 12 : 1

Target PCB Recommendations
Total thickness: 1.5mm min.
Plating: Gold or Solder finish

Description: Recommended PCB layout

Primary dimension units are millimeters, Secondary dimension units are [inches], Weight is in grams.

Tolerances: Hole diameters ±0.03mm [±0.001"], Pitches (from true position) ±0.025mm [±0.001"], substrate thickness tolerance ±10%, all other tolerances ±0.13mm [±0.005"] unless stated otherwise. Materials and specifications are subject to change without notice.

SG-MLF-7075 Drawing	Material: N/A Finish: N/A Weight: 6.02	STATUS: Released	SHEET: 2 OF 4	REV. B
Ironwood Electronics, Inc. Tele: (800) 404-0204 www.ironwoodelectronics.com		ENG: M.A.Fedde	DRAWN BY: M. Raske	SCALE: 6:1
		FILE: SG-MLF-7075 Dwg	DATE: 3/27/2013	

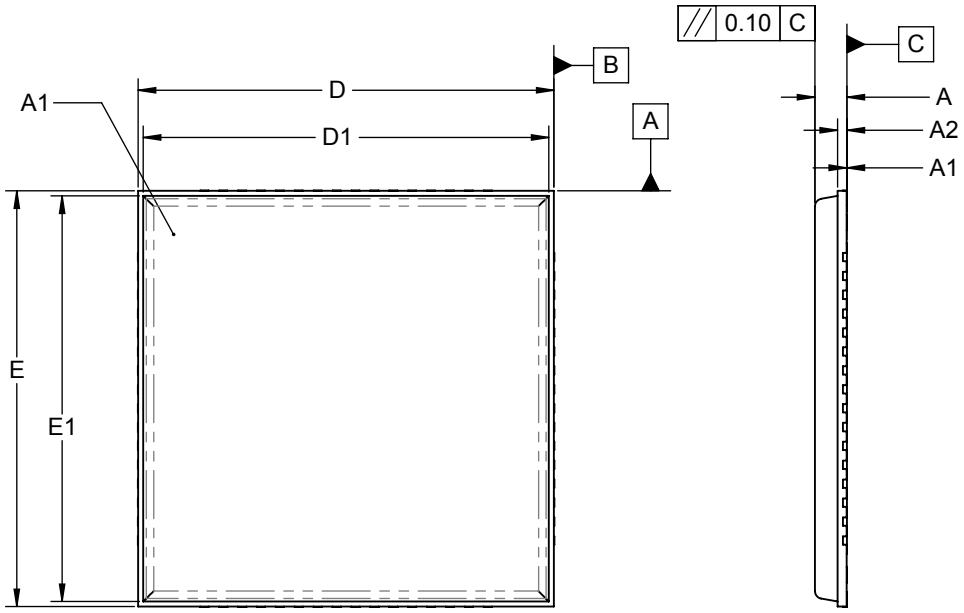

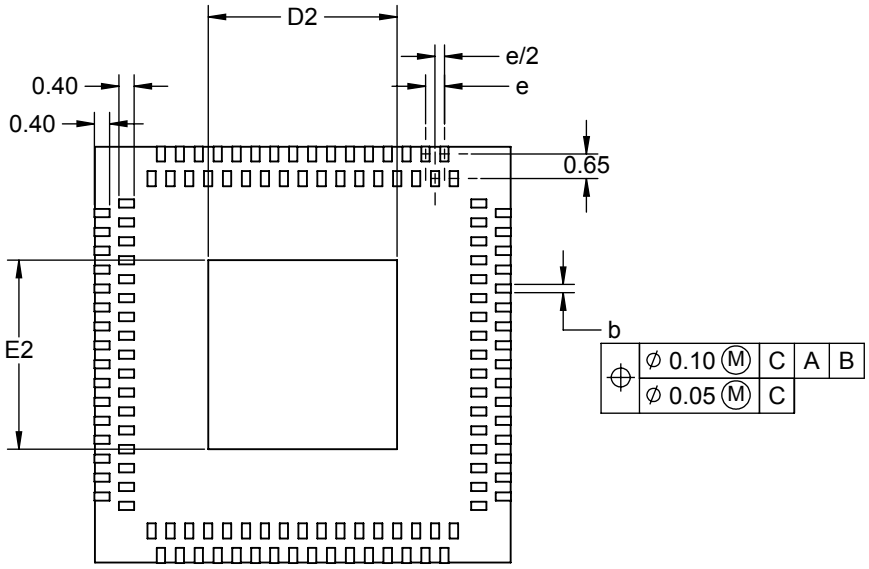

DIM	MIN	MAX
A	0.80	0.90
A1	0	0.06
A2	0.60	0.65
b	0.17	0.27
D/E	10.90	11.10
D1/E1	10.63	10.83
D2/E2	4.90	5.10
e	0.50 BSC	

1. Dimensions are in millimeters.
2. Interpret dimensions and tolerances per ASME Y14.5M-1994.
3. Dimension b is measured at the maximum solder ball diameter, parallel to datum plane Z.
4. Datum Z (seating plane) is defined by the spherical crowns of the solder balls.
5. Parallelism measurement shall exclude any effect of mark on top surface of package.

Description: BGA

Primary dimension units are millimeters, Secondary dimension units are [inches], Weight is in grams.

Tolerances: Hole diameters ±0.03mm [±0.001"], Pitches (from true position) ±0.025mm [±0.001"], substrate thickness tolerance ±10%, all other tolerances ±0.13mm [±0.005"] unless stated otherwise. Materials and specifications are subject to change without notice.

SG-MLF-7075 Drawing	Material: N/A Finish: N/A Weight: 6.02	STATUS: Released	SHEET: 3 OF 4	REV. B
Ironwood Electronics, Inc. Tele: (800) 404-0204 www.ironwoodelectronics.com		ENG: M.A.Fedde	DRAWN BY: M. Raske	SCALE: 1:1
		FILE: SG-MLF-7075 Dwg	DATE: 3/27/2013	

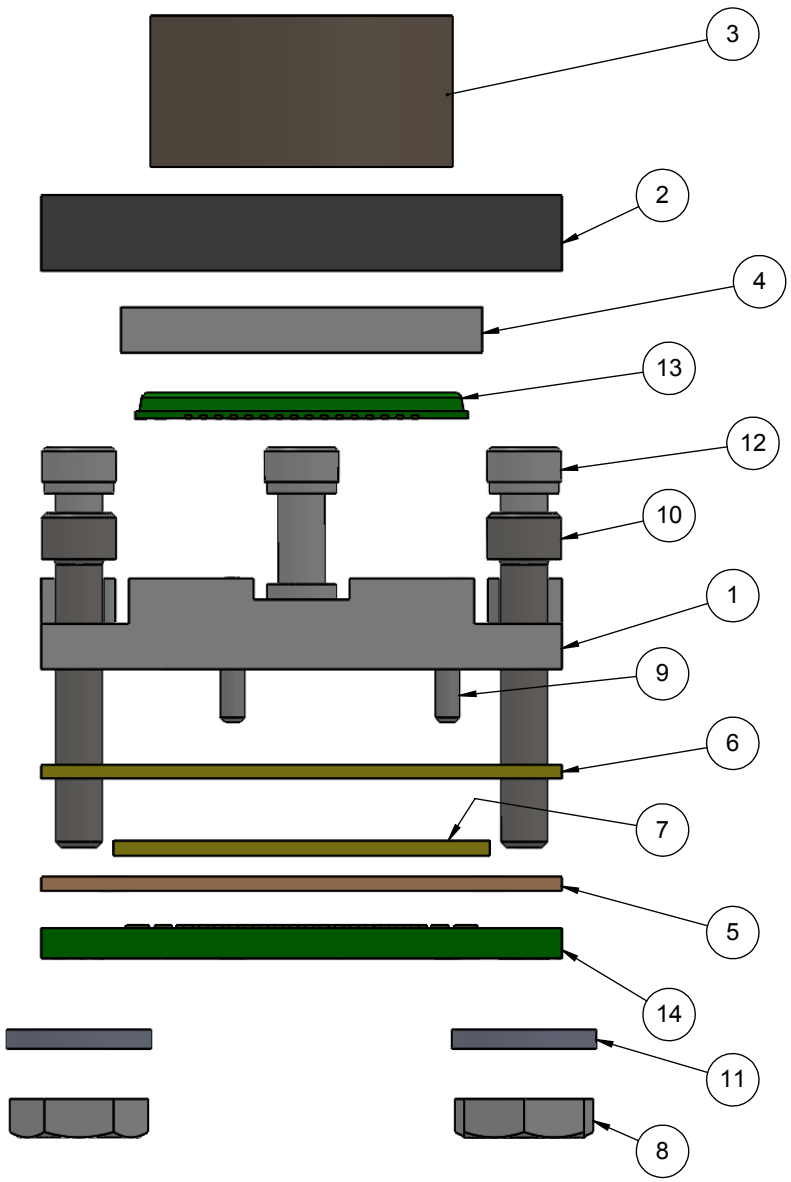

ITEM NO.	DESCRIPTION	Material
1	Socket Base	7075-T6 Aluminum Alloy
2	Socket Lid 12mm	7075-T6 Alumium Alloy
3	Compression Screw M10	7075-T6 Alumium Alloy
4	Compression Plate 11.95 x 1.5mm	7075-T6 Aluminum Alloy
5	Elastomer Guide	Ultem 1000
6	IC (MLF) Guide	Torlon 4203
7	0.5mm thick, 0.05x 0.05mm pitch, 12.45mm sqr, Z-axis conductive angled elastomer	20 Micron dia gold plated brass filaments arranged symettrically in a silicon rubber (63.5 degree angle), Thickness: 0.5mm
8	Nut, #0-80, SS	Stainless Steel (18-8)
9	Dowel Pin, 1/32" x 3/16", SS	Chrome Stainless Steel
10	#0-80 X .375 LG, SOC HD CAP SCREW, ALLOY STL, BLK OXIDE	Alloy Steel
11	Washer, #0 x .025", Nylon	Nylon 6/6
12	#0-80 Shoulder Screw, 0.062" thread length	Stainless Steel (303)
13	Test Chip	Material <not specified>
14	Test PCB	Material <not specified>

Rev	Date	Initials	Description
A	-	-	Original
B	11/11/14	DH/MR	IC Guide Mat'l change

Description: Skt, Insulation Plate, Pin Det

Primary dimension units are millimeters, Secondary dimension units are [inches], Weight is in grams.

Tolerances: Hole diameters ±0.03mm [±0.001"], Pitches (from true position) ±0.025mm [±0.001"], substrate thickness tolerance ±10%, all other tolerances ±0.13mm [±0.005"] unless stated otherwise. Materials and specifications are subject to change without notice.

SG-MLF-7075 Drawing	Material: N/A Finish: N/A Weight: 6.02	STATUS: Released	SHEET: 4 OF 4	REV. B
Ironwood Electronics, Inc. Tele: (800) 404-0204 www.ironwoodelectronics.com		ENG: M.A.Fedde	DRAWN BY: M. Raske	SCALE: 4:1
		FILE: SG-MLF-7075 Dwg	DATE: 3/27/2013	