GHz BGA Socket - Direct mount, solderless

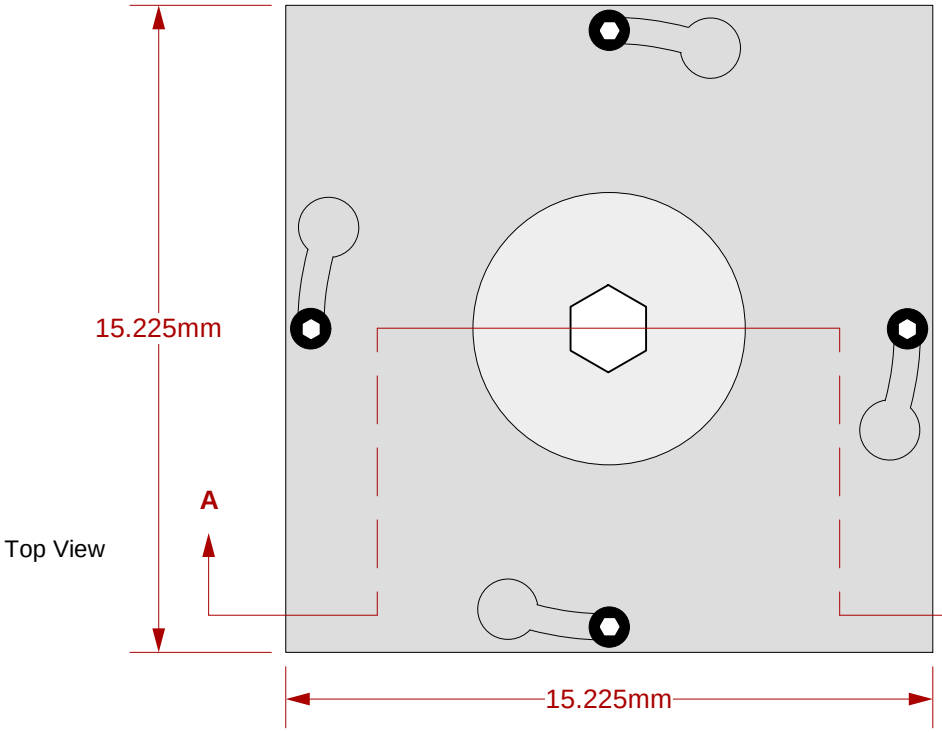

Top View

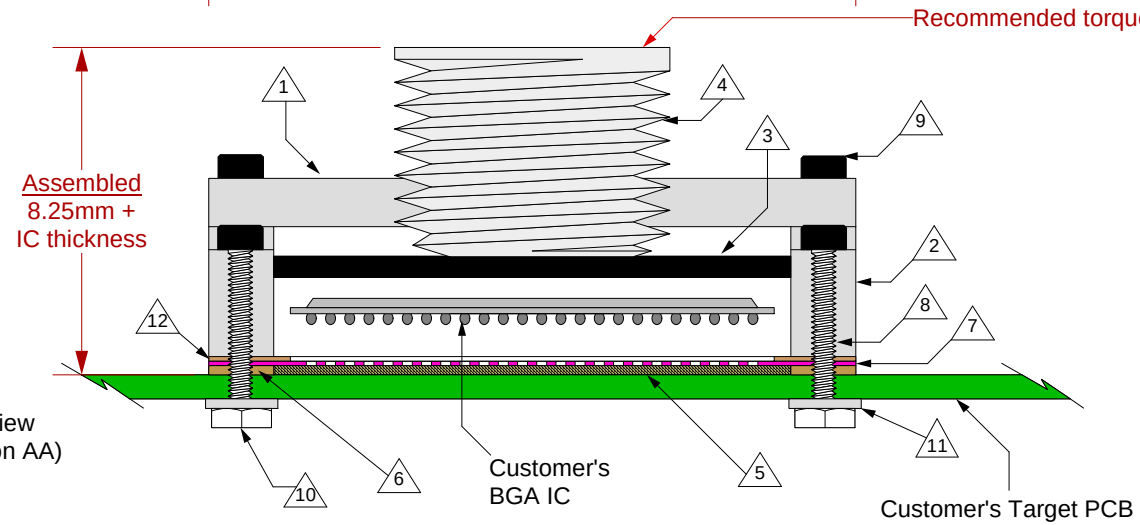

Side View
(Section AA)

Features

- Directly mounts to target PCB (needs tooling holes) with hardware.
- High speed, reliable Elastomer connection
- Minimum real estate required
- Compression plate distributes forces evenly
- Ball guide prevents over compression of elastomer
- Easily removable swivel socket lid

1	Socket Lid: Black anodized Aluminum. Thickness = 2.5mm.
2	Socket base: Black anodized Aluminum. Thickness = 5mm.
3	Compression Plate: Black anodized Aluminum. Thickness = 2.5mm.
4	Compression screw: Clear anodized Aluminum. Thickness = 5mm, Hex socket = 5mm.
5	Elastomer: 40 micron dia gold plated brass filaments arranged symmetrically in a silicone rubber (63.5 degree angle). Thickness = 0.75mm.
6	Elastomer Guide: Cirlex Thickness = 0.725mm.
7	Ball Guide: Kapton polyimide.
8	Socket base screw: Socket head cap, alloy steel with black oxide finish, 0-80 fine thread , 9.525mm long.
9	Socket lid screw: Shoulder screw, 18-8 SS, 0-80 fine thread.
10	Socket base nut: 18-8 Stainless steel, 0-80 fine thread.
11	Nylon washer: 1.73mm ID; 4.78mm OD 0.64mm thickness.
12	IC Guide: Torlon

SG-BGA-6149 Drawing	Status: Released	Scale: -	Rev: C
© 2006 IRONWOOD ELECTRONICS, INC. 11351 Rupp Drive, Suite 400, Burnsville, MN 55337 Tele: (952) 229-8200 www.ironwoodelectronics.com	Drawing: H. Hansen	Date: 3/23/05	
	File: SG-BGA-6149 Dwg	Modified:04/10/14	

All tolerances: ±0.125mm (unless stated otherwise). Materials and specifications are subject to change without notice.

Recommended PCB Layout
Top View

***Note: BGA pattern is not symmetrical with respect to the mounting holes.**

Note: Full BGA pattern shown.
Please adjust pattern according to individual requirements.

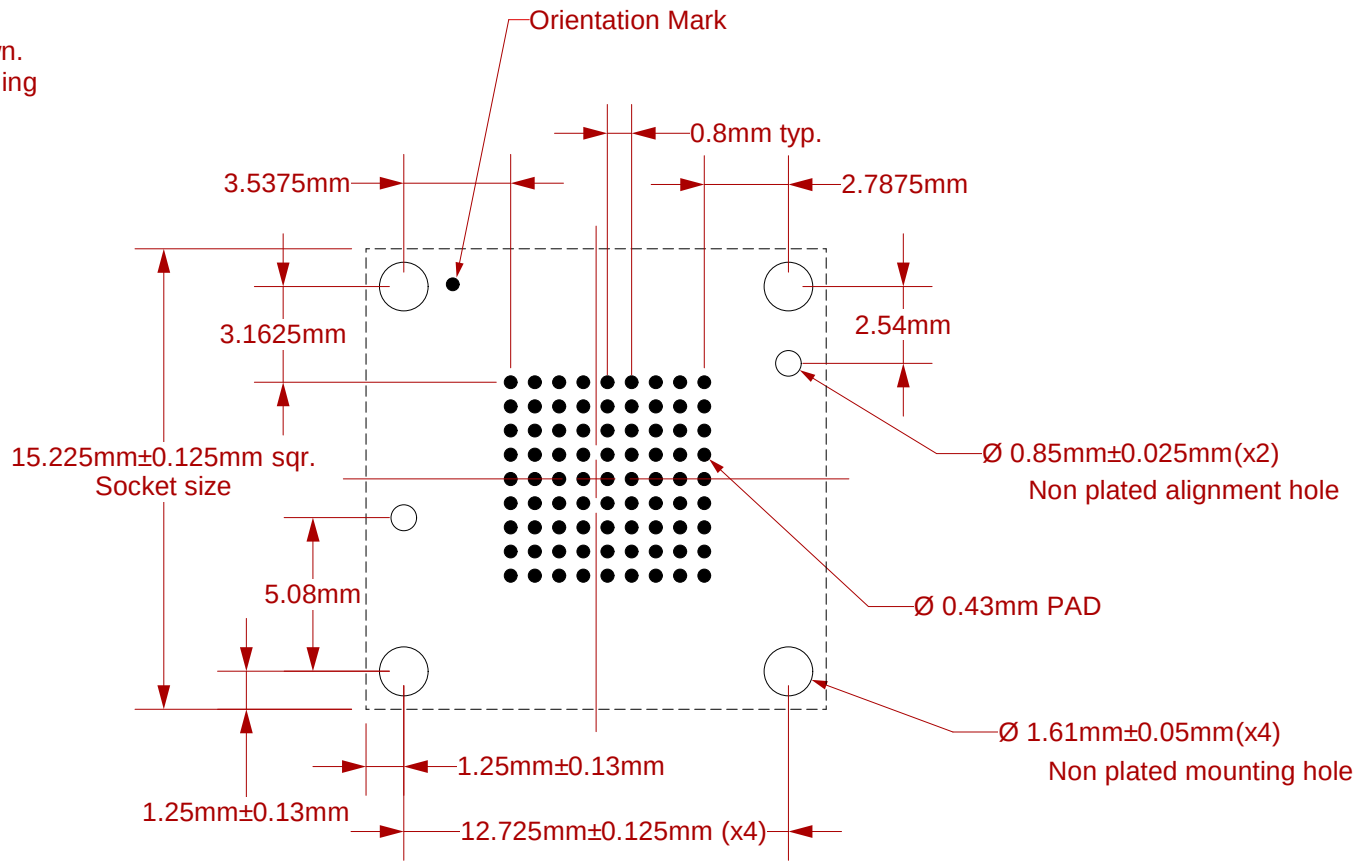

Target PCB Recommendations
Total thickness: 1.6mm min.
Plating: Gold or Solder finish
PCB Pad height: Same or higher than solder mask

Recommended PCB Layout Tolerances: ±0.025mm [±0.001"] unless stated otherwise.

SG-BGA-6149 Drawing	Status: Released	Scale: 4:1	Rev: C
© 2006 IRONWOOD ELECTRONICS, INC. 11351 Rupp Drive, Suite 400, Burnsville, MN 55337 Tele: (952) 229-8200 www.ironwoodelectronics.com	Drawing: H. Hansen	Date: 3/23/05	
	File: SG-BGA-6149 Dwg	Modified: 04/10/14	

Compatible BGA Spec.

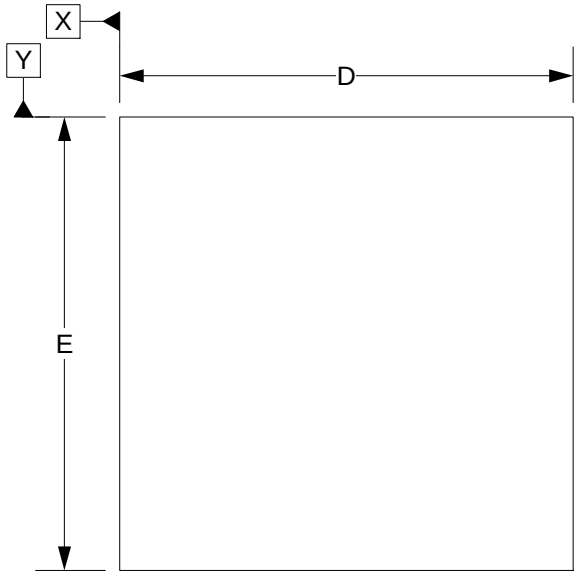

Top View

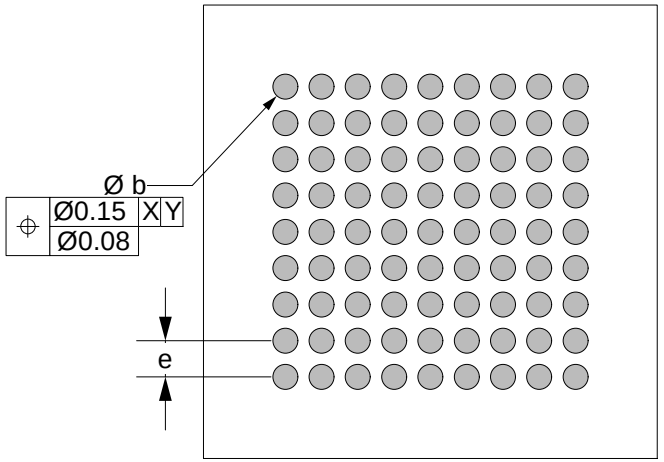

Bottom View Array: 9x9

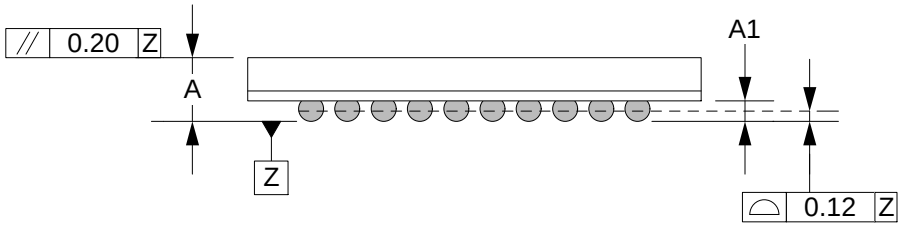

Side View

1. Dimensions are in millimeters.
2. Interpret dimensions and tolerances per ASME Y14.5M-1994.
3. Dimension b is measured at the maximum solder ball diameter, parallel to datum plane Z.
4. Datum Z (seating plane) is defined by the spherical crowns of the solder balls.
5. Parallelism measurement shall exclude any effect of mark on top surface of package.

DIM	MIN	MAX
A		1.15
A1	0.27	0.37
b		0.47
D	9.0 BSC	
E	9.0 BSC	
e	0.8 BSC	

SG-BGA-6149 Drawing	Status: Released	Scale: -	Rev: C
© 2006 IRONWOOD ELECTRONICS, INC. 11351 Rupp Drive, Suite 400, Burnsville, MN 55337 Tele: (952) 229-8200 www.ironwoodelectronics.com	Drawing: H. Hansen	Date: 3/23/05	
	File: SG-BGA-6149 Dwg	Modified: 04/10/14	