List of "SFV__R-1/2STE1" customer document

DOCUMENT NO.	LIST
SC-SFV01	SPEC.
JSA92450	CAT.NO.TABLE FOR 0.5mm CONTACT SPACING CONNECTOR (SFV__R-1/2ST_)
JSA92451	CONNECTOR USED FOR FPC/FFC WITH 0.5mm CONTACT SPACING (SFV__R-1ST_)
JSA92452	CONNECTOR USED FOR FPC/FFC WITH 0.5mm CONTACT SPACING (SFV__R-2ST_)
JSA92453	CAT.NO.TABLE FOR PLASTIC TAPE PACKAGED 0.5mm CONTACT SPACING CONNECTOR (SFV__R-1/2STE1)
JSA92454	PLASTIC TAPE PACKAGED 0.5mm CONTACT SPACING CONNECTOR (SFV__R-1STE1)
JSA92455	PLASTIC TAPE PACKAGED 0.5mm CONTACT SPACING CONNECTOR (SFV__R-2STE1)
JSA92456	RECOMMENDED CABLE (FPC) (SFV__R-1/2ST_)
JSA92457	RECOMMENDED CABLE (FFC) (SFV__R-1/2ST_)
BJM-SFV101	HANDLING PROCEDURES

mat'l. code				surface ISO 1302	tolerance ISO 406 ISO 1101	projection	product family 58EF
ltr	ecn no	dr	date	tolerances unless otherwise specified			title 0.5mm SPACING FPC/FFC CONNECTOR DOCUMENT LIST (Cat. No. : SFV__R-1/2STE1)
A	J03-0196	H.T	'03/5/1	angles	linear		
B	J06-0372	H.T	'06/9/7			scale X	
				dr	[signature] 9/7/06	FCI	dwg no JSA 95808 sheet 1of1 size A4
				engr	[signature] 9/7/06		
				chr	R. Shouji 9/8/06		
				appd	S. Audani 9/11/06		type Product Customer Drawing

sheet index	revision	B	Rev. B
	sheet	1	

form: A4

Copyright FCI
FCIconnect.com

PDM: Rev:B STATUS:Released Printed: Dec 19, 2007

CAT. NO. & DIMENSIONS

NO. OF CONTACTS (n)	CAT. NO.	DIMENSIONS (NOTE2)			
		A ± 0.2	B ± 0.2	C ± 0.1	D ± 0.1
4	SFV4R-1/2ST__	7.5	5.9	1.5	2.7
5	SFV5R-1/2ST__	8.0	6.4	2.0	3.2
6	SFV6R-1/2ST__	8.5	6.9	2.5	3.7
7	SFV7R-1/2ST__	9.0	7.4	3.0	4.2
8	SFV8R-1/2ST__	9.5	7.9	3.5	4.7
9	SFV9R-1/2ST__	10.0	8.4	4.0	5.2
10	SFV10R-1/2ST__	10.5	8.9	4.5	5.7
11	SFV11R-1/2ST__	11.0	9.4	5.0	6.2
12	SFV12R-1/2ST__	11.5	9.9	5.5	6.7
13	SFV13R-1/2ST__	12.0	10.4	6.0	7.2
14	SFV14R-1/2ST__	12.5	10.9	6.5	7.7
15	SFV15R-1/2ST__	13.0	11.4	7.0	8.2
16	SFV16R-1/2ST__	13.5	11.9	7.5	8.7
17	SFV17R-1/2ST__	14.0	12.4	8.0	9.2
18	SFV18R-1/2ST__	14.5	12.9	8.5	9.7
19	SFV19R-1/2ST__	15.0	13.4	9.0	10.2
20	SFV20R-1/2ST__	15.5	13.9	9.5	10.7
21	SFV21R-1/2ST__	16.0	14.4	10.0	11.2
22	SFV22R-1/2ST__	16.5	14.9	10.5	11.7
23	SFV23R-1/2ST__	17.0	15.4	11.0	12.2
24	SFV24R-1/2ST__	17.5	15.9	11.5	12.7
25	SFV25R-1/2ST__	18.0	16.4	12.0	13.2
26	SFV26R-1/2ST__	18.5	16.9	12.5	13.7
27	SFV27R-1/2ST__	19.0	17.4	13.0	14.2
28	SFV28R-1/2ST__	19.5	17.9	13.5	14.7
29	SFV29R-1/2ST__	20.0	18.4	14.0	15.2
30	SFV30R-1/2ST__	20.5	18.9	14.5	15.7
31	SFV31R-1/2ST__	21.0	19.4	15.0	16.2
32	SFV32R-1/2ST__	21.5	19.9	15.5	16.7
33	SFV33R-1/2ST__	22.0	20.4	16.0	17.2
34	SFV34R-1/2ST__	22.5	20.9	16.5	17.7
35	SFV35R-1/2ST__	23.0	21.4	17.0	18.2

CAT. NO. SFV (n) R - 1 ST __

- SERIES NAME
- NO. OF CONTACTS
- RIGHT ANGLE TYPE
- FOR FPC/FFC, CONTACT DIRECTION
  1. LOWER CONTACT TYPE
  2. UPPER CONTACT TYPE
- FOR AUTOMATIC MOUNTING (SMT)
- PACKAGE STYLE

NOTES

1. THIS PRODUCT IS THE CONNECTOR USED FOR FPC/FFC AND COPES WITH AUTOMATIC MOUNTING (SMT).
2. SEE PART DRAWINGS FOR DIMENSIONS A-D.

ltr	ecn no	dr	date
1	—	S.I	'93/9/9
2	—	M.H	'95/1/17
3	—	M.I	'97/11/5
4	J00182	M.Y	'00/4/24
AA	J03-0196	H.T	'03/5/1
AB	J06-0372	H.T	'06/9/7

mat'l. code | surface ISO 1302 | tolerance ISO 406 ISO 1101 | projection

tolerances unless otherwise specified: angles | linear

dr 9/7/'06 | engr 9/7/'06 | chr 9/7/'06 | appd 9/11/'06

scale X

product family 58EF

title: CAT. NO. TABLE FOR 0.5 mm CONTACT SPACING CONNECTOR (Cat. No. : SFV__R-1/2ST__)

dwg no JSA 92450 | sheet 1 of 1 | size A4

type Product Customer Drawing

sheet index	revision	AB
	sheet	1

Rev. AB

SC-SFV01 form: A4

JSA92451, 92452, 92453, 92454, 92455, 92456, 92457

FCIconnect.com

Copyright FCI

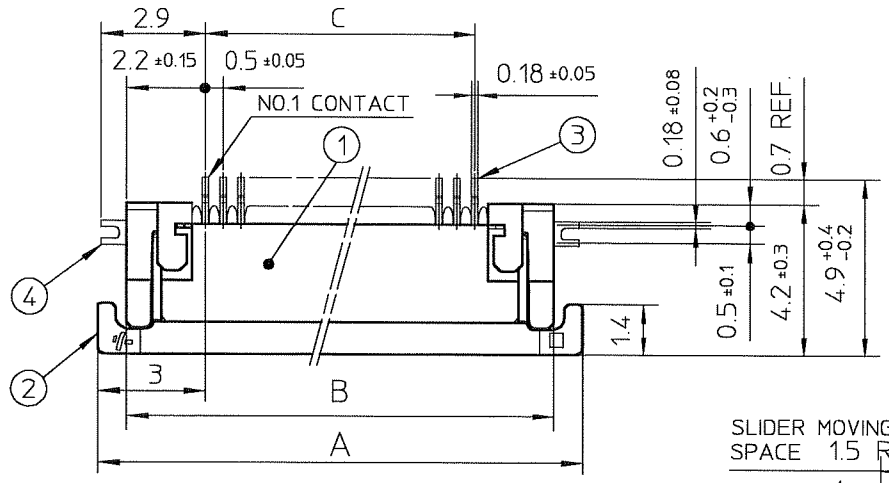

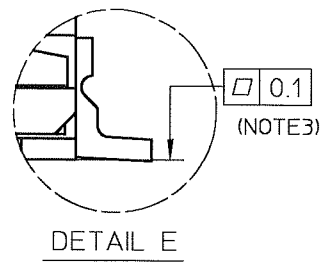

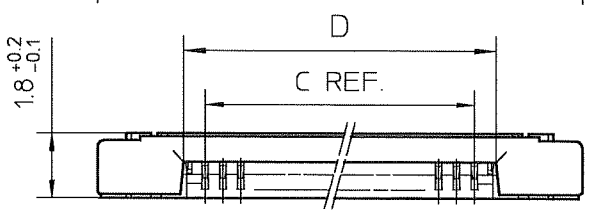

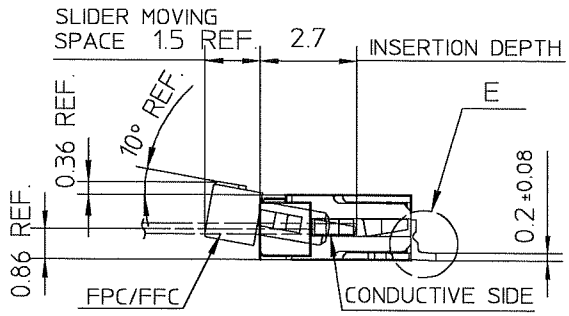

PT. NO.	PARTS NAME	MATERIAL	Q'TY	NOTE
1	HOUSING	POLYAMIDE RESIN GLASS REINFORCED (UL94V-0)	1	COLOR : BLACK
2	SLIDER	PPS RESIN GLASS REINFORCED (UL94V-0)	1	COLOR : BROWN
3	CONTACT	PHOSPHOR BRONZE	n	PLATING : TIN ALLOY
4	MOUNTING PLATE		2	

n : NO. OF CONTACTS

RECOMMENDED PC BOARD LAYOUT
(COMPONENT SIDE)

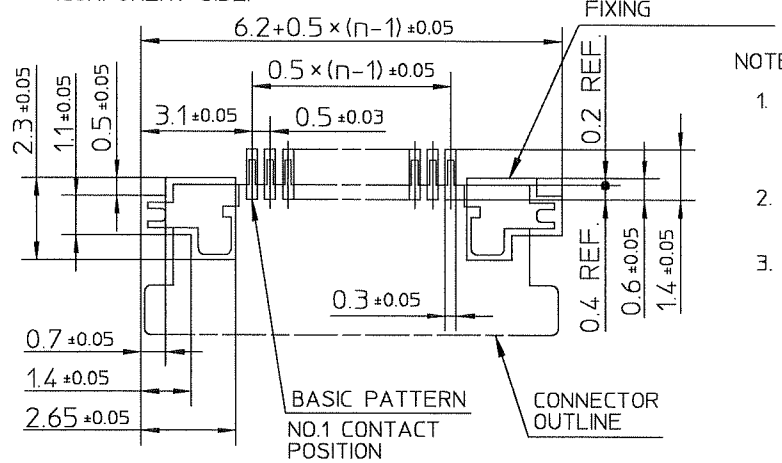

NOTES

1. THIS PRODUCT IS THE CONNECTOR USED FOR FPC/FFC AND COPES WITH AUTOMATIC MOUNTING (SMT).
2. THIS PRODUCT IS LOWER CONTACT TYPE CONNECTOR.
3. FLATNESS OF CONTACT TERMINAL AND MOUNTING PLATE MUST BE WITHIN TOLERANCE IN E PORTION DETAILED DRAWING.

mat'l. code				surface ISO 1302	tolerance ISO 406 ISO 1101	projection	product family 58EF
ltr	ecn no	dr	date	tolerances unless otherwise specified			title CONNECTOR USED FOR FPC/FFC WITH 0.5 mm CONTACT SPACING (Cat No. : SFV__R-1ST__)
1	——	S.I	'93/9/9	angles	linear ±0.2		
2	——	M.H	'94/12/8				
3	——	M.H	'95/11/10			scale X	
4	J00182	M.Y	'00/4/24	dr	9/7/06	FCI	dwg no JSA 92451 sheet 1 of 1 size A4
AA	J03-0196	H.T	'06/5/1	engr	9/7/06		
AB	J06-0064	H.T	'06/2/23	chr	9/7/06		
AC	J06-0372	H.T	'06/9/7	appd	9/11/06		type Product Customer Drawing

sheet index	revision	AC	Rev. AC
	sheet	1	

SC-SFV01 JSA92450
form: A4

FCIconnect.com
Copyright FCI

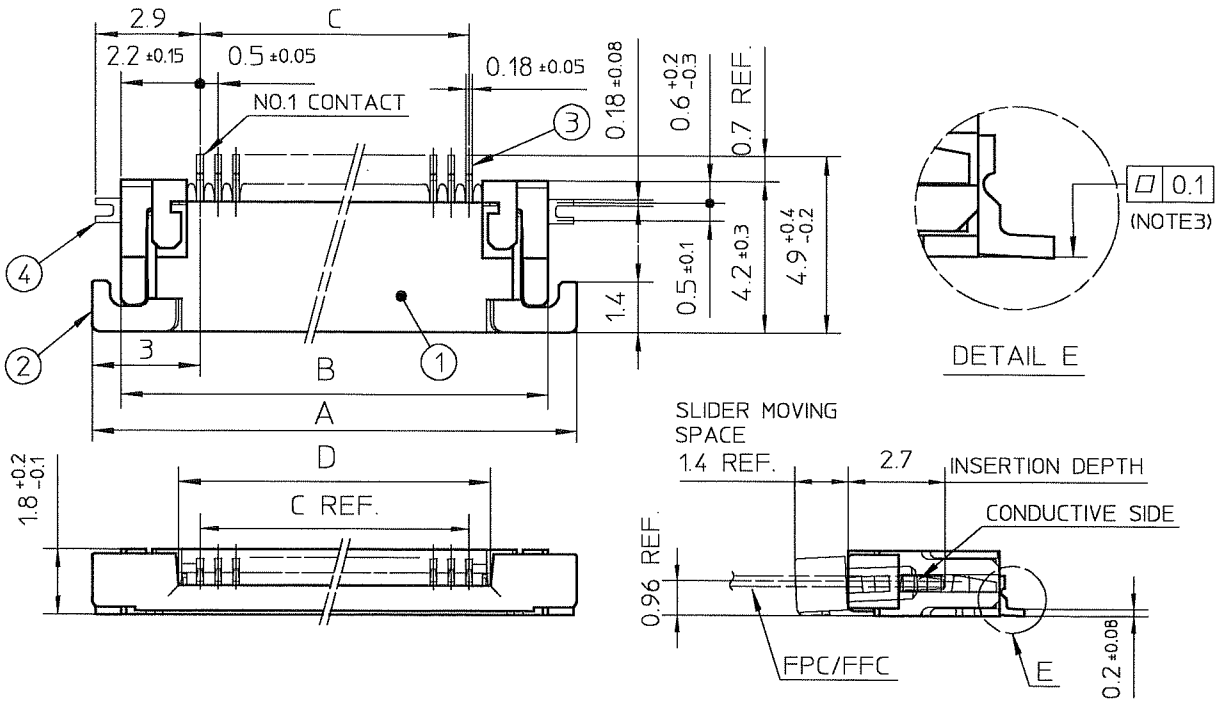

PT. NO.	PARTS NAME	MATERIAL	Q'TY	NOTE
1	HOUSING	POLYAMIDE RESIN GLASS REINFORCED (UL94V-0)	1	COLOR : BLACK
2	SLIDER	PPS RESIN GLASS REINFORCED (UL94V-0)	1	COLOR : BROWN
3	CONTACT	PHOSPHOR BRONZE	n	PLATING : TIN ALLOY
4	MOUNTING PLATE		2	

n : NO. OF CONTACTS

RECOMMENDED PC BOARD LAYOUT
(COMPONENT SIDE)

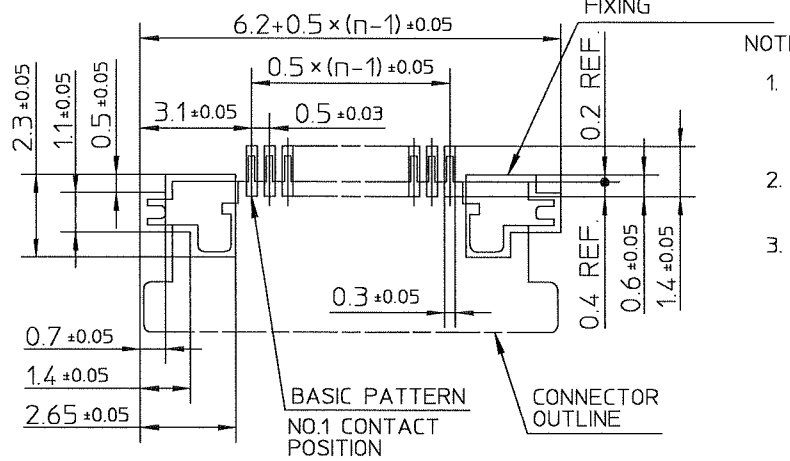

NOTES

1. THIS PRODUCT IS THE CONNECTOR USED FOR FPC/FFC AND COPES WITH AUTOMATIC MOUNTING (SMT).
2. THIS PRODUCT IS UPPER CONTACT TYPE CONNECTOR.
3. FLATNESS OF CONTACT TERMINAL AND MOUNTING PLATE MUST BE WITHIN TOLERANCE IN E PORTION DETAILED DRAWING.

mat'l. code				surface ISO 1302	tolerance ISO 406 ISO 1101	projection	product family 58EF
ltr	ecn no	dr	date	tolerances unless otherwise specified			title CONNECTOR USED FOR FPC/FFC WITH 0.5 mm CONTACT SPACING (Cat. No. : SFV__R-2ST__)
1	——	S.I	'93/9/9	angles	linear ±0.2		
2	——	M.H	'94/12/8				
3	——	M.H	'95/11/10			scale X	
4	J00182	M.Y	'00/4/24	dr	9/7/'06	FCI	dwg no JSA 92452 sheet 1 of 1 size A4
AA	J03-0196	H.T	'03/5/1	engr	9/7/'06		
AB	J06-0064	H.T	'06/2/23	chr	9/8/'06		
AC	J06-0372	H.T	'06/9/7	appd	9/11/'06		type Product Customer Drawing

sheet index	revision	AC	Rev. AC
	sheet	1	

SC-SFV01 JSA92450
form: A4

FCIconnect.com
Copyright FCI

CAT. NO. & DIMENSIONS

NO. OF CONTACTS (n)	CAT. NO.	DIMENSIONS (NOTE3)		
		F ± 5	G ± 0.3	H ± 0.1
4	SFV4R-1/2STE1	20.4	16	—
5	SFV5R-1/2STE1	20.4	16	—
6	SFV6R-1/2STE1	20.4	16	—
7	SFV7R-1/2STE1	28.4	24	—
8	SFV8R-1/2STE1	28.4	24	—
9	SFV9R-1/2STE1	28.4	24	—
10	SFV10R-1/2STE1	28.4	24	—
11	SFV11R-1/2STE1	28.4	24	—
12	SFV12R-1/2STE1	28.4	24	—
13	SFV13R-1/2STE1	28.4	24	—
14	SFV14R-1/2STE1	28.4	24	—
15	SFV15R-1/2STE1	28.4	24	—
16	SFV16R-1/2STE1	28.4	24	—
17	SFV17R-1/2STE1	28.4	24	—
18	SFV18R-1/2STE1	28.4	24	—
19	SFV19R-1/2STE1	28.4	24	—
20	SFV20R-1/2STE1	28.4	24	—
21	SFV21R-1/2STE1	28.4	24	—
22	SFV22R-1/2STE1	28.4	24	—
23	SFV23R-1/2STE1	36.4	32	28.4
24	SFV24R-1/2STE1	36.4	32	28.4
25	SFV25R-1/2STE1	36.4	32	28.4
26	SFV26R-1/2STE1	36.4	32	28.4
27	SFV27R-1/2STE1	36.4	32	28.4
28	SFV28R-1/2STE1	36.4	32	28.4
29	SFV29R-1/2STE1	36.4	32	28.4
30	SFV30R-1/2STE1	36.4	32	28.4
31	SFV31R-1/2STE1	48.4	44	40.4
32	SFV32R-1/2STE1	48.4	44	40.4
33	SFV33R-1/2STE1	48.4	44	40.4
34	SFV34R-1/2STE1	48.4	44	40.4
35	SFV35R-1/2STE1	48.4	44	40.4

CAT. NO. SFV (n) R - 1 ST E1

- SERIES NAME
- NO. OF CONTACTS
- RIGHT ANGLE TYPE
- FOR FPC/FFC, CONTACT DIRECTION
  1. LOWER CONTACT TYPE
  2. UPPER CONTACT TYPE
- FOR AUTOMATIC MOUNTING (SMT)
- TAPE PACKAGING

NOTES

1. THIS PRODUCT IS THE CONNECTOR USED FOR FPC/FFC AND COPES WITH AUTOMATIC MOUNTING (SMT).
2. THIS CATALOG NO. INDICATES PLASTIC TAPE PACKAGED CONNECTOR.
3. SEE PART DRAWINGS FOR DIMENSIONS F~H.

ltr	ecn no	dr	date
4	——	M.I	'97/11/5
5	J00182	M.Y	'00/4/24
AA	J03-0196	H.T	'03/5/1
AB	J06-0372	H.T	'06/9/7

mat'l. code

surface ISO 1302 ✓ tolerance ISO 406 ISO 1101

tolerances unless otherwise specified

angles | linear

projection

scale X

dr	[signature]	9/7/06
engr	[signature]	9/7/06
chr	R. Shouji	9/8/06
appd	S. Akutsu	9/11/06

product family 58EF

title
CAT. NO. TABLE FOR PLASTIC TAPE PACKAGED
0.5 mm CONTACT SPACING CONNECTOR
(Cat. No. : SFV__R-1/2STE1)

dwg no JSA 92453 | sheet 1 of 1 | size A4

type Product Customer Drawing

sheet index	revision sheet	AB 1	Rev. AB

SC-SFV01 JSA92450
form: A4

Copyright FCI
FCIconnect.com

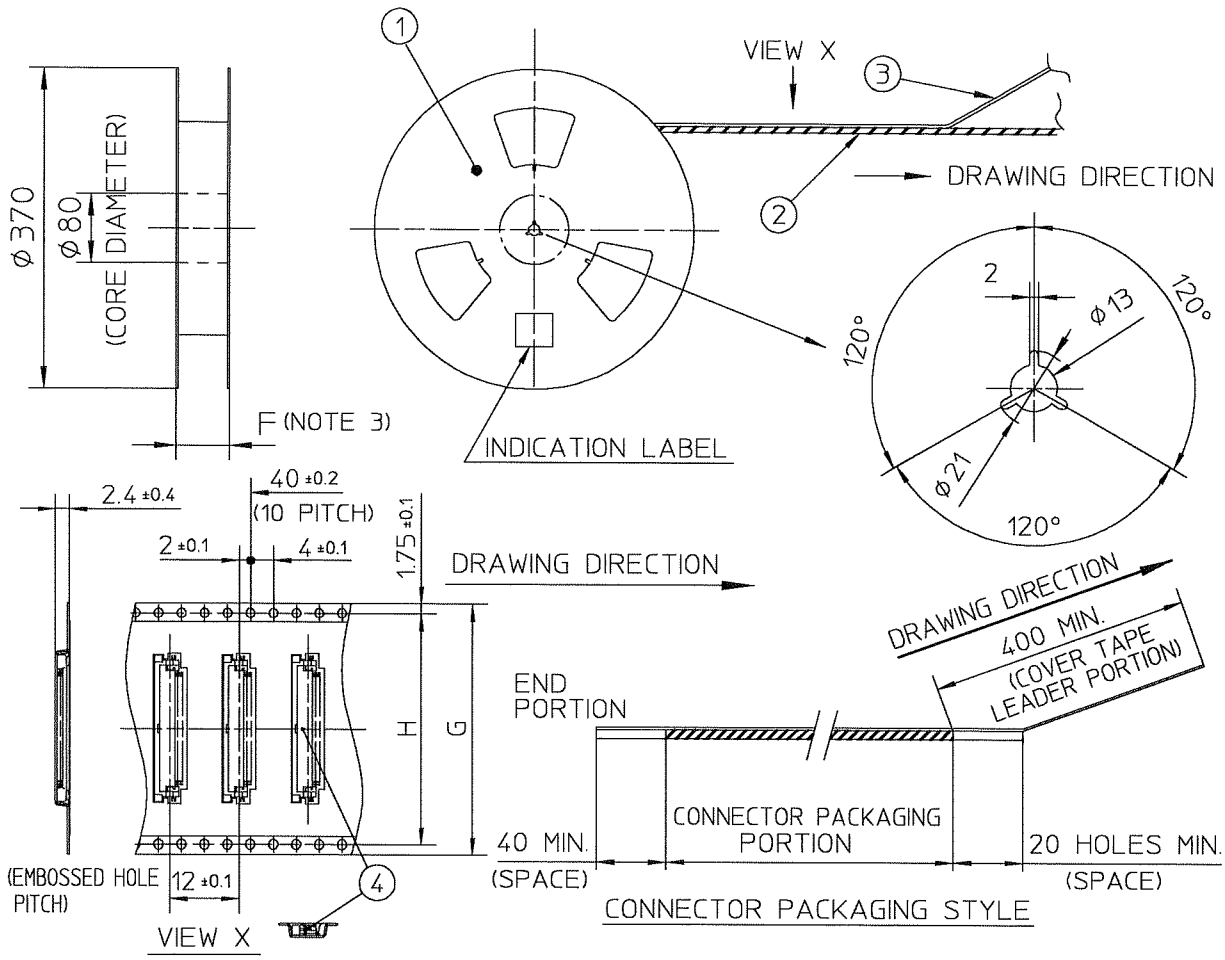

PT. NO.	PARTS NAME	CAT. NO.	MATERIAL	Q'TY	NOTE
1	REEL	———	CARDBOARD	1	COLOR : WHITE
2	PLASTIC (EMBOSS) TAPE	———	A-PET	——	COLOR : TRANSPARENCY
3	COVER	———	POLYESTER	——	COLOR : TRANSPARENCY
4	CONNECTOR	SFV__R-1ST__	SEE ATTACHED DWG.	3000	LOWER CONTACT TYPE

NOTES

1. THIS IS PLASTIC TAPE PACKAGED CONNECTOR USED FOR FPC/FFC AND COPES WITH AUTOMATIC MOUNTING (SMT).
2. SEE JIS C 0806 (PACKING OF ELECTRONIC COMPONENTS ON CONTINUOUS TAPES (SURFACE MOUNTING DEVICES)) FOR SHAPE AND DIMENSIONS OF PLASTIC (EMBOSS) TAPE AND REEL.
3. F DIMENSION IS PORTION OF THE CORE.

mat'l. code				surface ISO 1302	tolerance ISO 406 ISO 1101	projection	product family 58EF
ltr	ecn no	dr	date	tolerances unless otherwise specified			title PLASTIC TAPE PACKAGED 0.5 mm CONTACT SPACING CONNECTOR (Cat. No. : SFV__R-1STE1)
1	——	M.K	'96/7/3	angles	linear ±5		
AA	J03-0196	H.T	'03/5/1				
AB	J06-0372	H.T	'06/9/7	±5°		scale X	
				dr	9/7/06	FCI	dwg no JSA 92454 sheet 1 of 1 size A4
				engr	9/7/06		
				chr	9/8/06		
				appd	9/11/06		type Product Customer Drawing
sheet index	revision	AB					Rev. AB
	sheet	1					

SC-SFV01 JSA92450
form: A4

FCIconnect.com
Copyright FCI

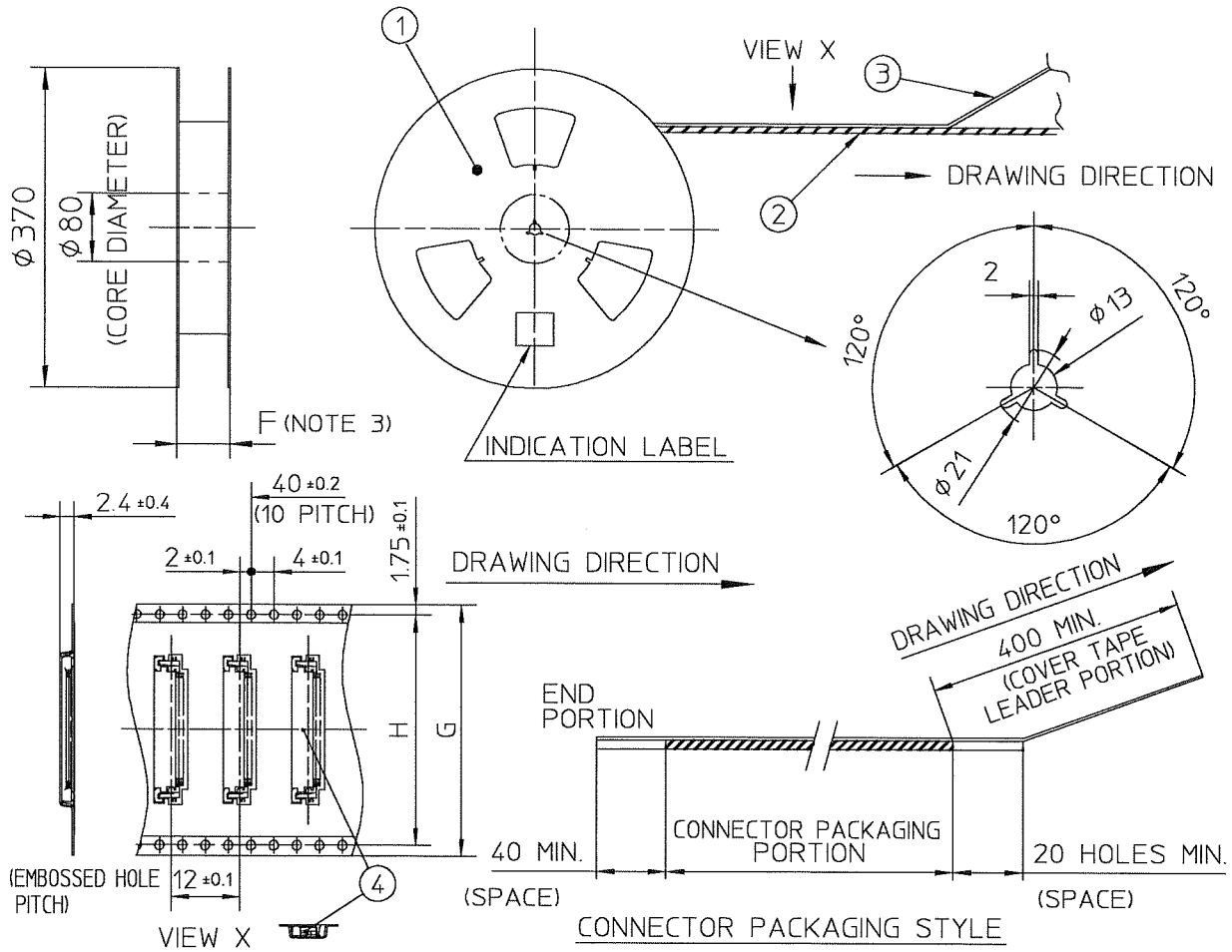

PT. NO.	PARTS NAME	CAT. NO.	MATERIAL	Q'TY	NOTE
1	REEL	———	CARDBOARD	1	COLOR : WHITE
2	PLASTIC (EMBOSS) TAPE	———	A-PET	——	COLOR : TRANSPARENCY
3	COVER	———	POLYESTER	——	COLOR : TRANSPARENCY
4	CONNECTOR	SFV__R-2ST__	SEE ATTACHED DWG.	3000	UPPER CONTACT TYPE

NOTES

1. THIS IS PLASTIC TAPE PACKAGED CONNECTOR USED FOR FPC/FFC AND COPES WITH AUTOMATIC MOUNTING (SMT).
2. SEE JIS C 0806 (PACKING OF ELECTRONIC COMPONENTS ON CONTINUOUS TAPES (SURFACE MOUNTING DEVICES)) FOR SHAPE AND DIMENSIONS OF PLASTIC (EMBOSS) TAPE AND REEL.
3. E DIMENSION IS PORTION OF THE CORE.

CHANGED DRAWING PORTION.
FORM CHANGED.

ltr	ecn no	dr	date
1	———	M.K	'96/7/3
AA	J03-0196	H.T	'03/5/1
AB	J06-0372	H.T	'06/9/7

mat'l. code

surface ISO 1302 ✓ tolerance ISO 406 ISO 1101

tolerances unless otherwise specified

angles ±5° linear ±5

projection

scale X

dr	[signature]	9/7/06
engr	[signature]	9/7/06
chr	K. Shouji	9/8/06
appd	S. Ondai	9/11/06

product family 58EF

title
PLASTIC TAPE PACKAGED
0.5 mm CONTACT SPACING CONNECTOR
(Cat. No. : SFV__R-2STE1)

dwg no JSA 92455 sheet 1 of 1 size A4

type Product Customer Drawing

sheet index	revision	AB
	sheet	1

Rev. AB

SC-SFV01 JSA92450
form: A4

FCIconnect.com
Copyright FCI

RECOMMENDED CABLE (FPC)

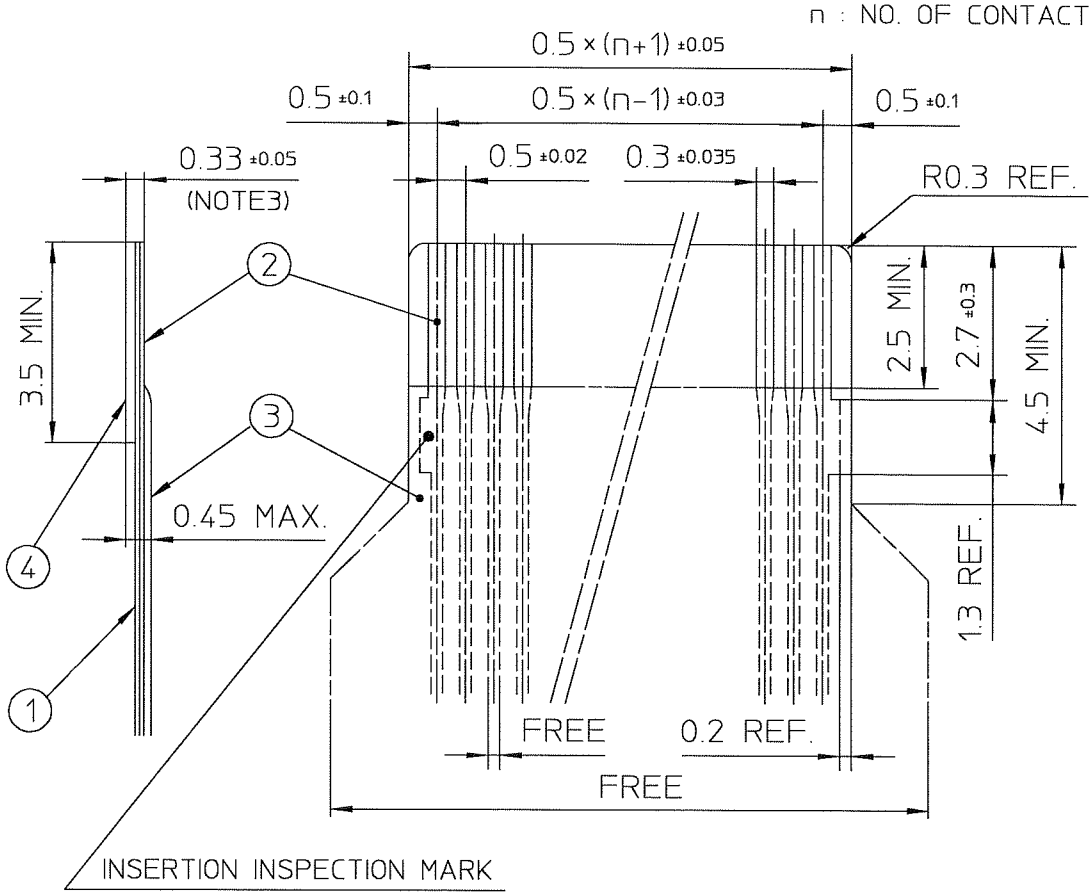

PT. NO.	PARTS NAME	MATERIAL	THICKNESS(μm)
1	BASE FILM	POLYIMIDE OR POLYESTER OR EQUAL	25
2	CONDUCTOR	COPPER FOIL(PLATING : SOLDER 1μm MIN.)	35
3	OVERLAY	POLYIMIDE OR POLYESTER OR EQUAL	—
4	SUPPORTING TAPE	POLYESTER OR POLYIMIDE OR EQUAL	188

NOTES

1. NO BURR AT EACH PORTION.
2. NO PEELING IN COMMON USE.
3. TOTAL THICKNESS LIMIT OF EACH MATERIAL (INCLUDING ADHESIVE AGENT) IS SPECIFIED.

ltr	ecn no	dr	date
1	—	M.H	'94/12/8
AA	J03-0196	H.T	'03/5/1
AB	J06-0372	H.T	'06/9/7

mat'l. code | surface ISO 1302 | tolerance ISO 406 ISO 1101 | tolerances unless otherwise specified | angles | linear | projection | scale X

dr	[signature]	9/2/06
engr	[signature]	9/7/06
chr	[signature]	9/8/'06
appd	[signature]	9/11/'06

product family 58EF

title: RECOMMENDED CABLE (Cat. No. : SFV__R-1/2ST__)

dwg no JSA 92456 | sheet 1of1 | size A4

type Product Customer Drawing

sheet index	revision sheet	AB 1	Rev. AB

SC-SFV01 form: A4 JSA92450

FCIconnect.com
Copyright FCI

PDM: Rev:AB STATUS:Released Printed: Dec 19, 2007

RECOMMENDED CABLE (FFC)

n : NO. OF CONTACTS

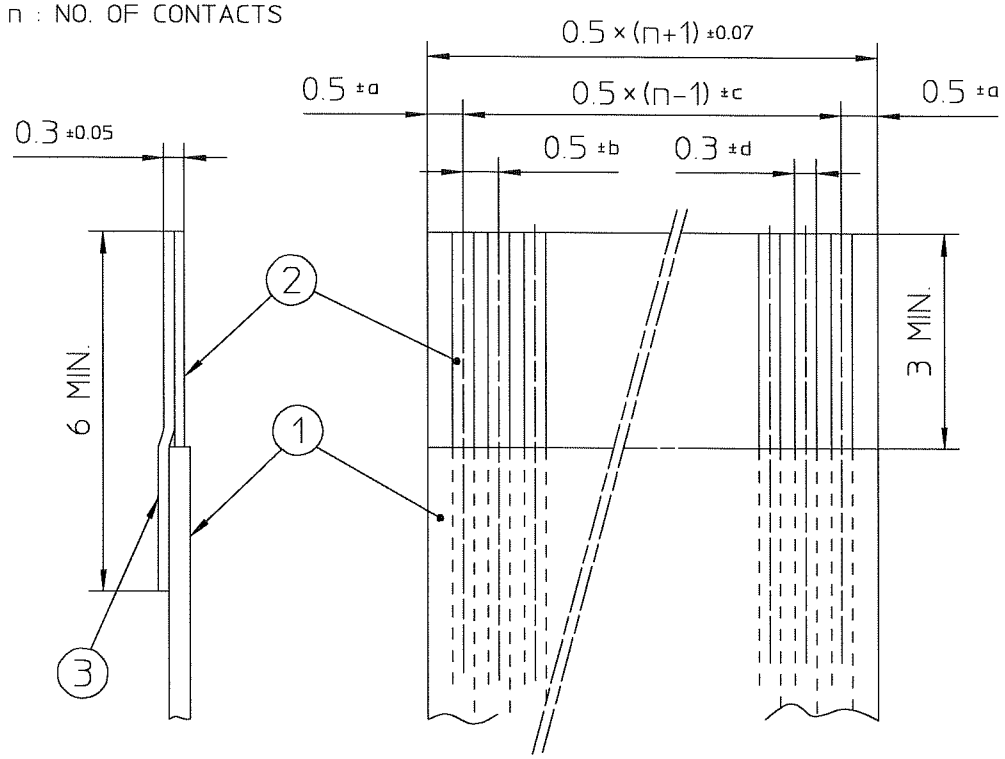

KIND OF FFC (NOTE3)	DIMENSIONAL TOLERANCE			
	a	b	c	d
1	±0.07	±0.04	±0.05	±0.02
2	±0.1	±0.03	±0.03	±0.025

PT. NO.	PARTS NAME	MATERIAL	NOTE
1	INSULATOR	FLAME RESISTING POLYESTER OR EQUAL	———
2	CONDUCTOR	COPPER FOIL:THICKNESS 35 OR 50 μm	PLATING : TIN OR SOLDER 1μm MIN.
3	SUPPORTING TAPE	FLAME RESISTING POLYESTER OR EQUAL	———

NOTES

1. NO BURR AT EACH PORTION.
2. NO PEELING IN COMMON USE.
3. EITHER KIND1 OR KIND2 OF FFC CAN ACCEPT DIMENSIONAL TOLERANCE a,b,c AND d.

mat'l. code				surface ISO 1302	tolerance ISO 406 ISO 1101	projection	product family 58EF
ltr	ecn no	dr	date	tolerances unless otherwise specified			title RECOMMENDED CABLE (Cat. No. : SFV__R-1/2ST__)
1	——	S.I	'93/9/9	angles	linear		
2	——	M.H	'94/12/8				
AA	J03-0196	H.T	'03/5/1			scale X	
AB	J06-0372	H.T	'06/9/7	dr	[signature] 11/27/06	FCI	dwg no sheet 1 of 1 JSA 92457 size A4
AC	J06-0499	H.T	'06/11/27	engr	[signature] 11/27/06		
				chr	R. Brown 11/27/06		
				appd	S. Nadami 11/28/06		type Product Customer Drawing

sheet index	revision	AC	Rev. AC
	sheet	1	

SC-SFV01 JSA92450
form: A4

FCIconnect.com
Copyright FCI

PDM: Rev:AC STATUS:Released Printed: Dec 19, 2007