

SFP-2100

125M MMF SFP Transceiver (2km, 850nm, -20 to 85C)

LevelOne Infinity Small Form Factor Pluggable (SFP) transceiver is compatible with the Small Form Factor Pluggable Multi-Sourcing Agreement (MSA). It complies with Fast Ethernet standard as well as the RoHS compliant and lead-free per Directive 2002/95/EC. This Hot-swappable SFP transceiver offers the latest industry standard in full-duplex Ethernet connectivity and withstand under wide range temperature operation.

Features

- Duplex LC connector
- Compliant with Fast Ethernet standard
- 3.3V Single power supply
- Hot-swappable
- RoHS compliant and Lead Free
- Low EMI with metal housing
- Industrial operating temperature range -20 to 85C

Diagrams

Unit: mm

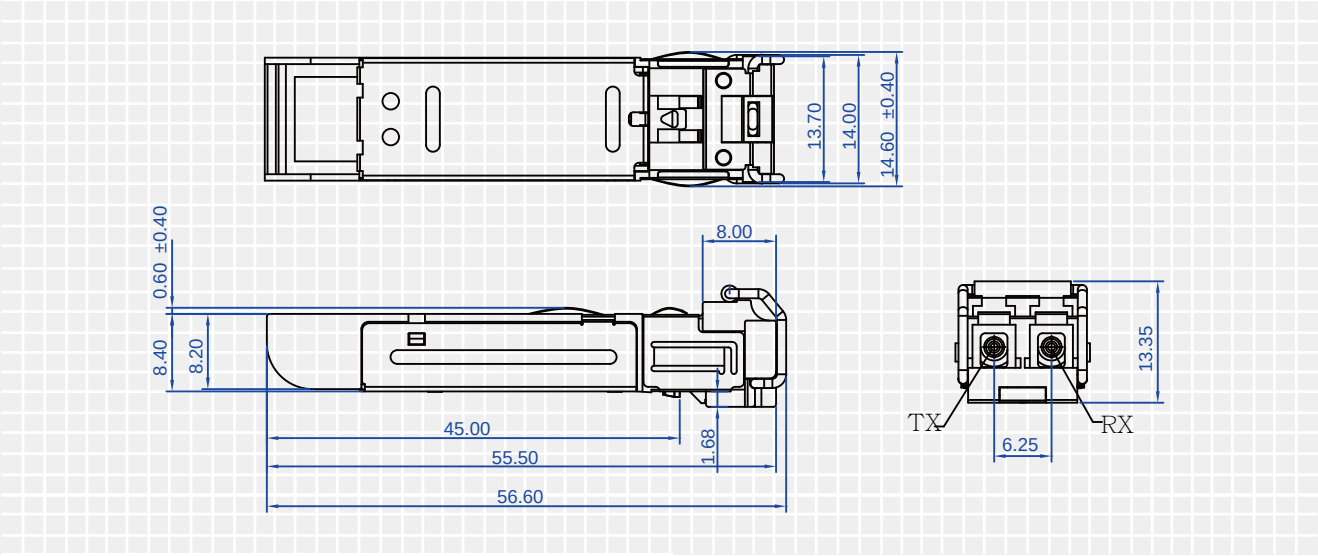

Specifications

Form Factor	SFP
Connector	LC
Wavelength	850nm
Distance	2km
Data Rate (Max)	125Mbps

Transmit Power (min)	-10dBm
Transmit Power (max)	-4dBm
Operating Temperature	-20 to 85C
Storage Temperature	-40 to 85C
Approval	CE, FCC, RoHS

Ordering Information

- Gigabit

SFP-4200 - 1.25G MMF SFP Transceiver (550m, 850nm, -20 to 85C)
SFP-4210 - 1.25G SMF SFP Transceiver (10km, 1310nm, -40 to 85C)
SFP-4240 - 1.25G SMF SFP Transceiver (40km, 1310nm, -40 to 85C)
SFP-4270 - 1.25G SMF SFP Transceiver (70km, 1550nm, -40 to 85C)
SFP-4310 - 1.25G BIDI SMF SFP Transceiver (10km, T1310/R1550, -40 to 85C)
SFP-4320 - 1.25G BIDI SMF SFP Transceiver (10km, T1550/R1310, -40 to 85C)
SFP-4330 - 1.25G BIDI SMF SFP Transceiver (20km, T1310/R1550, -40 to 85C)
SFP-4340 - 1.25G BIDI SMF SFP Transceiver (20km, T1550/R1310, -40 to 85C)
SFP-4350 - 1.25G BIDI SMF SFP Transceiver (40km, T1310/R1550, -40 to 85C)
SFP-4360 - 1.25G BIDI SMF SFP Transceiver (40km, T1550/R1310, -40 to 85C)
SFP-4370 - 1.25G BIDI SMF SFP Transceiver (60km, T1310/R1550, -40 to 85C)
SFP-4380 - 1.25G BIDI SMF SFP Transceiver (60km, T1550/R1310, -40 to 85C)

- Fast Ethernet

SFP-2100 - 155M MMF SFP Transceiver (2km, 850nm, -20 to 85C)
SFP-2200 - 155M MMF SFP Transceiver (2km, 1310nm, -40 to 85C)
SFP-2230 - 155M SMF SFP Transceiver (30km, 1310nm, -40 to 85C)
SFP-2260 - 155M SMF SFP Transceiver (60km, 1310nm, -40 to 85C)
SFP-2280 - 155M SMF SFP Transceiver (80km, 1310nm, -40 to 85C)
SFP-2300 - 155M SMF SFP Transceiver (20km, 1550nm, -40 to 85C)
SFP-2310 - 155M SMF SFP Transceiver (100km, 1550nm, -40 to 85C)
SFP-2320 - 155M SMF SFP Transceiver (120km, 1550nm, -40 to 85C)