SFM31-B THRU SFM38-B

List

List..... 1

Package outline..... 2

Features..... 2

Mechanical data..... 2

Maximum ratings 2

Rating and characteristic curves..... 3

Pinning information.....4

Marking..... 4

Suggested solder pad layout..... 4

Packing information..... 5

Reel packing..... 6

Suggested thermal profiles for soldering processes..... 6

High reliability test capabilities.....7

SFM31-B THRU SFM38-B

3.0A Surface Mount Super Fast Rectifiers-50-600V

Features

- Batch process design, excellent power dissipation offers better reverse leakage current and thermal resistance.
- Low profile surface mounted application in order to optimize board space.
- High current capability.
- Superfast recovery time for switching mode application.
- High surge current capability.
- Glass passivated chip junction.
- Lead-free parts meet RoHS requirments.
- Suffix "-H" indicates Halogen free parts, ex. SFM31-B-H.

Mechanical data

- Epoxy:UL94-V0 rated flame retardant
- Case : Molded plastic, DO-214AA / SMB
- Terminals : Solder plated, solderable per MIL-STD-750, Method 2026
- Polarity : Indicated by cathode band
- Mounting Position : Any
- Weight : Approximated 0.09 gram

Package outline

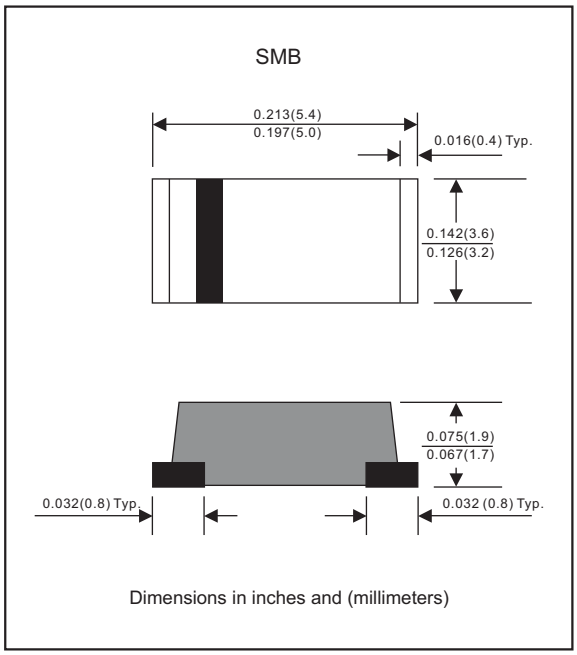

Dimensions in inches and (millimeters)

Maximum ratings and Electrical Characteristics (AT T_A=25°C unless otherwise noted)

PARAMETER	CONDITIONS	Symbol	MIN.	TYP.	MAX.	UNIT
Forward rectified current	Ambient temperature = 50°C	I_O			3.0	A
Forward surge current	8.3ms single half sine-wave superimposed on rate load (JEDEC methode)	I_{FSM}			100	A
Reverse current	V_R = V_{RRM} T_J = 25°C	I_R			5.0	uA
	V_R = V_{RRM} T_J = 125°C				100	
Diode junction capacitance	f=1MHz and applied 4V DC reverse voltage	C_J		45		pF
Storage temperature		T_{STG}	-65		+175	°C

SYMBOLS	V_{RRM} *1 (V)	V_{RMS} *2 (V)	V_R *3 (V)	V_F *4 (V)	t_{rr} *5 (ns)	Operating temperature T_J, (°C)
SFM31-B	50	35	50	0.95	35	-55 to +150
SFM32-B	100	70	100			
SFM33-B	150	105	150			
SFM34-B	200	140	200			
SFM35-B	300	210	300	1.25		
SFM36-B	400	280	400			
SFM37-B	500	350	500	1.70		
SFM38-B	600	420	600			

*1 Repetitive peak reverse voltage

*2 RMS voltage

*3 Continuous reverse voltage

*4 Maximum forward voltage@I_F=3.0A

*5 Maximum Reverse recovery time, note 1

Note 1. Reverse recovery time test condition, IF=0.5A, IR=1.0A, IRR=0.25A

Rating and characteristic curves (SFM31-B THRU SFM38-B)

FIG.1-TYPICAL FORWARD CHARACTERISTICS

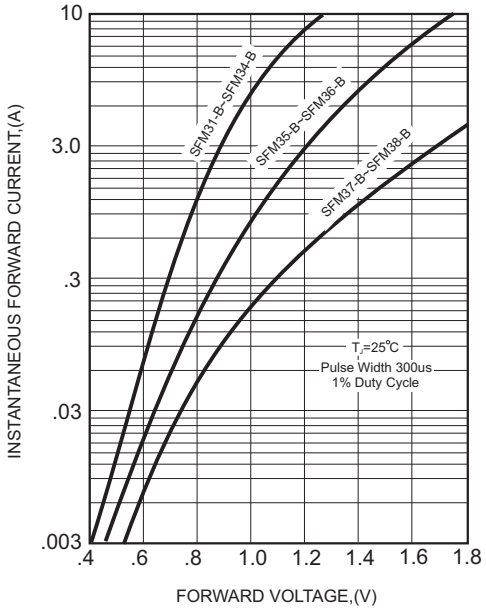

FIG.2-TYPICAL FORWARD CURRENT DERATING CURVE

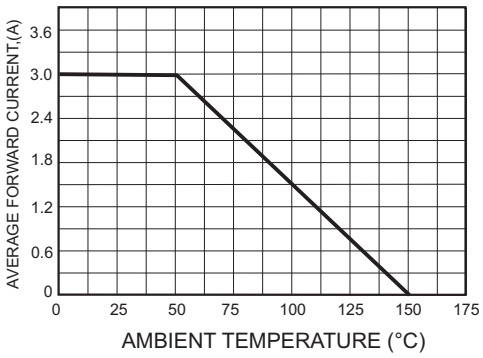

FIG.3- TEST CIRCUIT DIAGRAM AND REVERSE RECOVERY TIME CHARACTERISTICS

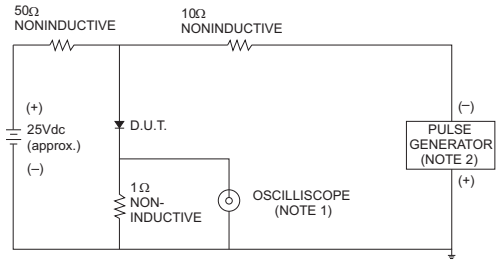

NOTES: 1. Rise Time= 7ns max., Input Impedance= 1 megohm.22pF.

2. Rise Time= 10ns max., Source Impedance= 50 ohms.

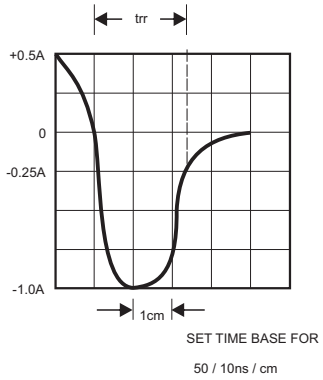

FIG.4-MAXIMUM NON-REPETITIVE FORWARD SURGE CURRENT

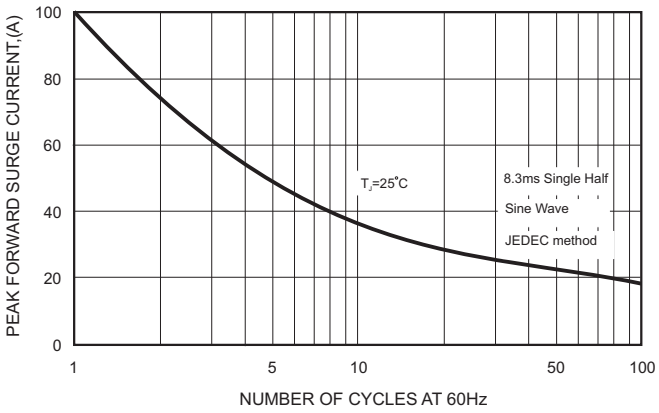

FIG.5-TYPICAL JUNCTION CAPACITANCE

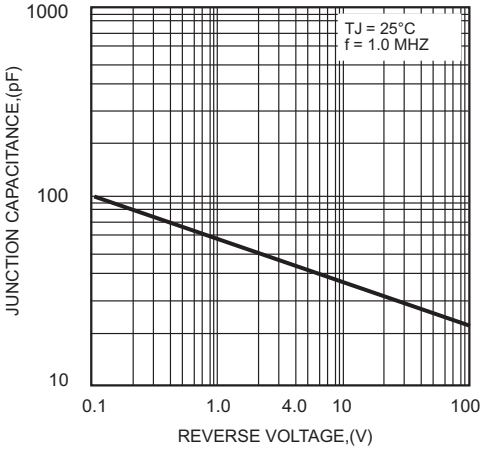

SFM31-B THRU SFM38-B

Pinning information

Pin	Simplified outline	Symbol
Pin1 cathode Pin2 anode		

Marking

Type number	Marking code
SFM31-B	S31
SFM32-B	S32
SFM33-B	S33
SFM34-B	S34
SFM35-B	S35
SFM36-B	S36
SFM37-B	S37
SFM38-B	S38

Suggested solder pad layout

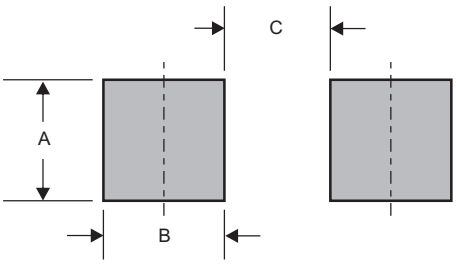

Dimensions in inches and (millimeters)

PACKAGE	A	B	C
SMB	0.142 (3.60)	0.059 (1.50)	0.118 (3.00)

SFM31-B THRU SFM38-B

Packing information

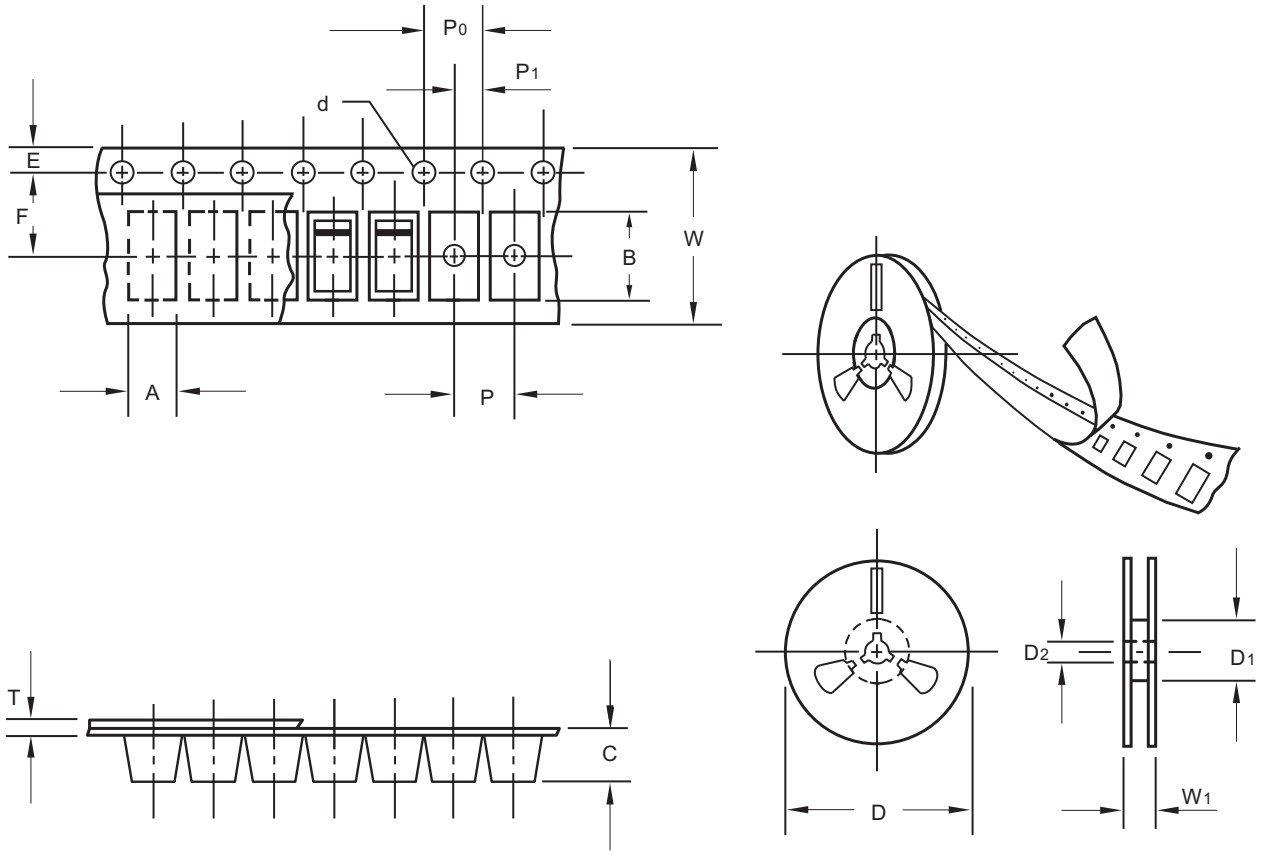

unit:mm

Item	Symbol	Tolerance	SMB
Carrier width	A	0.1	3.81
Carrier length	B	0.1	5.74
Carrier depth	C	0.1	2.24
Sprocket hole	d	0.1	1.50
13" Reel outside diameter	D	2.0	330.00
13" Reel inner diameter	D_1	min	50.00
7" Reel outside diameter	D	2.0	178.00
7" Reel inner diameter	D_1	min	62.00
Feed hole diameter	D_2	0.5	13.00
Sprocket hole position	E	0.1	1.75
Punch hole position	F	0.1	5.50
Punch hole pitch	P	0.1	8.00
Sprocket hole pitch	P_0	0.1	4.00
Embossment center	P_1	0.1	2.00
Overall tape thickness	T	0.1	0.23
Tape width	W	0.3	12.00
Reel width	W_1	1.0	18.00

Note:Devices are packed in accor dance with EIA standar RS-481-A and specifications listed above.

SFM31-B THRU SFM38-B

Reel packing

PACKAGE	REEL SIZE	REEL (pcs)	COMPONENT SPACING (m/m)	BOX (pcs)	INNER BOX (m/m)	REEL DIA, (m/m)	CARTON SIZE (m/m)	CARTON (pcs)	APPROX. GROSS WEIGHT (kg)
SMB	13"	4,000	8.0	8,000	337*337*37	330	350*330*360	64,000	16.9

Suggested thermal profiles for soldering processes

1.Storage environment: Temperature=5°C~40°C Humidity=55%±25%
2.Reflow soldering of surface-mount devices

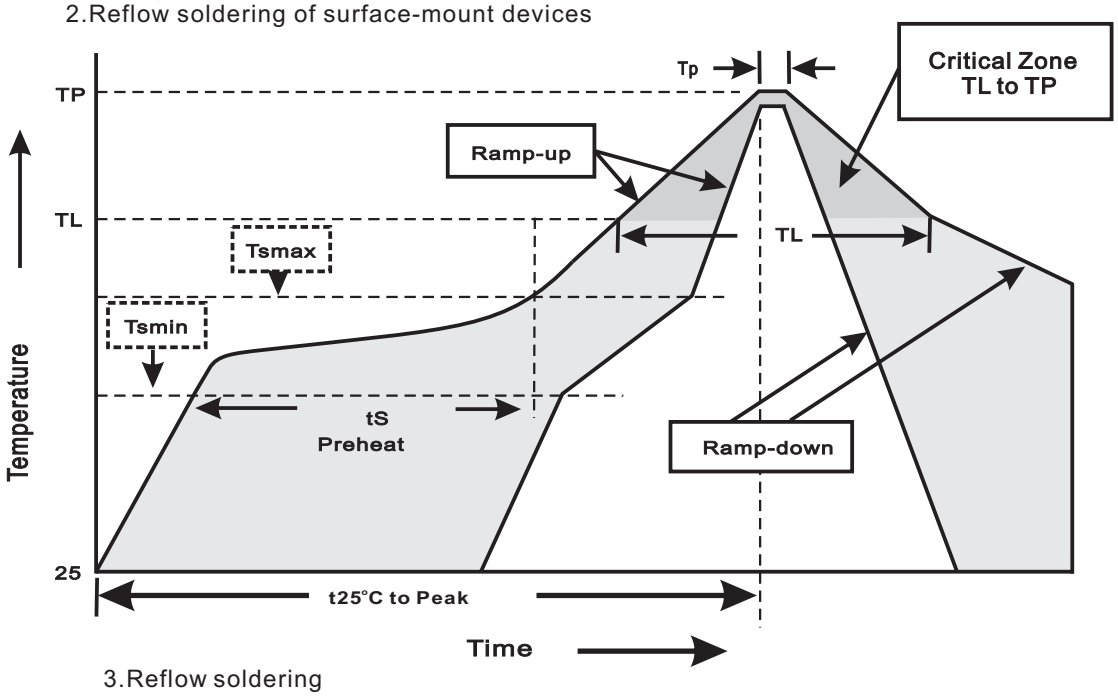

3.Reflow soldering

Profile Feature	Soldering Condition
Average ramp-up rate(T_L to T_P)	<3°C/sec
Preheat -Temperature Min(Tsmin) -Temperature Max(Tsmax) -Time(min to max)(t_s)	 150°C 200°C 60~120sec
Tsmax to T_L -Ramp-upRate	 <3°C/sec
Time maintained above: -Temperature(T_L) -Time(t_L)	 217°C 60~260sec
Peak Temperature(T_P)	255°C-0/+5°C
Time within 5°C of actual Peak Temperature(t_P)	10~30sec
Ramp-down Rate	<6°C/sec
Time 25°C to Peak Temperature	<6minutes

SFM31-B THRU SFM38-B

High reliability test capabilities

Item Test	Conditions	Reference
1. Solder Resistance	at 260±5°C for 10±2sec. immerse body into solder 1/16"±1/32"	MIL-STD-750D METHOD-2031
2. Solderability	at 245±5°C for 5 sec.	MIL-STD-202F METHOD-208
3. High Temperature Reverse Bias	V_R=80% rate at T_J=150°C for 168 hrs.	MIL-STD-750D METHOD-1038
4. Forward Operation Life	Rated average rectifier current at T_A=25°C for 500hrs.	MIL-STD-750D METHOD-1027
5. Intermittent Operation Life	T_A = 25°C, I_F = I_O On state: power on for 5 min. off state: power off for 5 min. on and off for 500 cycles.	MIL-STD-750D METHOD-1036
6. Pressure Cooker	15P_{SIG} at T_A=121°C for 4 hrs.	JESD22-A102
7. Temperature Cycling	-55°C to +125°C dwelled for 30 min. and transferred for 5min. total 10 cycles.	MIL-STD-750D METHOD-1051
8. Thermal Shock	0°C for 5 min. rise to 100°C for 5 min. total 10 cycles.	MIL-STD-750D METHOD-1056
9. Forward Surge	8.3ms single half sine-wave superimposed on rated load, one surge.	MIL-STD-750D METHOD-4066-2
10. Humidity	at T_A=85°C, RH=85% for 1000hrs.	MIL-STD-750D METHOD-1021
11. High Temperature Storage Life	at 175°C for 1000 hrs.	MIL-STD-750D METHOD-1031