High Speed Optocoupler, 10 MBd SOIC-8 Package

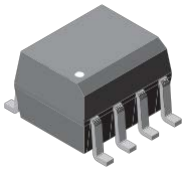

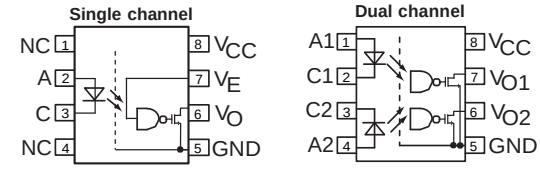

SFH6745T, SFH6746T, SFH6747T SFH6755T, SFH6756T, SFH6757T

18921-2

Features

- Choice of CMR performance of 10 kV/µs, 5 kV/µs, and 100 V/µs
- High speed: 10 MBd typical
- + 5 V CMOS compatibility
- Guaranteed AC and DC performance over temperature: - 40 to + 100 °C Temp. Range
- Pure tin leads
- Meets IEC60068-2-42 (SO_2) and IEC60068-2-43 (H_2S) requirements
- Low input current capability: 5 mA

- Lead-free component
- Component in accordance to RoHS 2002/95/EC and WEEE 2002/96/EC

Agency Approvals

- UL1577, File No. E52744 System Code Y
- CUL - File No. E52744, equivalent to CSA bulletin 5A
- DIN EN 60747-5-2 (VDE0884) (pending)
- Reinforced insulation rating
- VDE available with Option 1 per IEC60950 2.10.5.1 (pending)

Applications

Microprocessor System Interface

PLC, ATE input/output isolation

Computer peripheral interface

Digital Fieldbus Isolation: CC-Link, DeviceNet, Profibus, SDS

High speed A/D and D/A conversion

AC Plasma Display Panel Level Shifting

Multiplexed Data Transmission

Digital control power supply

Ground loop elimination

Description

The SFH674xT and SFH675xT are single and dual channel 10 MBd optocouplers utilizing a high efficient input LED coupled with an integrated optical photodiode IC detector. The detector has an open drain NMOS-transister output, providing less leakage compared to an open collector Schottky clamped transister output. For the single channel type, an enable function on pin 7 allows the detector to be strobed. The internal shield provides a guaranteed common mode transient immunity of 5 kV/µs for the SFH6746T and SFH6756T and 10 kV/µs for the SFH6747T and SFH6757T. The use of a 0.1 µF bypass capacitor connected between pin 5 and 8 is recommended.

Order Information

Part	Remarks
SFH6745T	100 V/µs, Single channel, SOIC-8
SFH6746T	5 kV/µs, Single channel, SOIC-8
SFH6747T	10 kV/µs, Single channel, SOIC-8
SFH6755T	100 V/µs, Dual channel, SOIC-8
SFH6756T	5 kV/µs, Dual channel, SOIC-8
SFH6757T	10 kV/µs, Dual channel, SOIC-8

Truth Table (Positive Logic)

LED	ENABLE	OUTPUT
ON	H	L
OFF	H	H
ON	L	H
OFF	L	H
ON	NC	L
OFF	NC	H

Absolute Maximum Ratings

T_{amb} = 25 °C, unless otherwise specified

Stresses in excess of the absolute Maximum Ratings can cause permanent damage to the device. Functional operation of the device is not implied at these or any other conditions in excess of those given in the operational sections of this document. Exposure to absolute Maximum Rating for extended periods of the time can adversely affect reliability.

Input

Parameter	Test condition	Symbol	Value	Unit
Average forward current[1)]		I_F	20	mA
Average forward current[2)]		I_F	15	mA
Reverse input voltage		V_R	5	V
Enable input voltage[1)]		V_E	V_{CC} + 0.5 V	V
Enable input current[1)]		I_E	5	mA
Surge current	t = 100 µs	I_{FSM}	200	mA

[1)] Package: Single SOIC-8

[2)] Package: Dual SOIC-8

Output

Parameter	Test condition	Symbol	Value	Unit
Supply voltage	1 minute max.	V_{CC}	7	V
Output current		I_O	50	mA
Output voltage		V_O	7	V
Output power dissipation[1)]		P_{diss}	85	mW
Output power dissipation per channel[2)]		P_{diss}	60	mW

[1)] Package: Single SOIC-8

[2)] Package: Dual SOIC-8

Coupler

Parameter	Test condition	Symbol	Value	Unit
Storage temperature		T_{stg}	- 55 to + 150	°C
Operating temperature		T_{amb}	- 40 to + 100	°C
Lead solder temperature	for 10 sec.		260	°C
Solder reflow temperature	for 1 minute		260	°C
Isolation test voltage	t = 1.0 sec.	V_{ISO}	3000	V_{RMS}

Recommended Operating Conditions

Parameter	Test condition	Symbol	Min	Typ.	Max	Unit
Operating temperature		T_{amb}	- 40		100	°C
Supply voltage		V_{cc}	4.5		5.5	V
Input current low level		I_{FL}	0		250	µA
Input current high level		I_{FH}	5		15	mA
Logic high enable voltage		V_{EH}	2.0		V_{CC}	V
Logic low enable voltage		V_{EL}	0.0		0.8	V
Output pull up resistor		R_L	330		4 K	Ω
Fanout	R_L = 1 kΩ	N			5	-

Electrical Characteristics

T_{amb} = 25 °C and V_{cc} = 5.5 V, unless otherwise specified
Minimum and maximum values are testing requirements. Typical values are characteristics of the device and are the result of engineering evaluation. Typical values are for information only and are not part of the testing requirements.

Input

Parameter	Test condition	Symbol	Min	Typ.	Max	Unit
Input forward voltage	I_F = 10 mA	V_F	1.1	1.4	1.7	V
Reverse current	V_R = 5.0 V	I_R		0.01	10	µA
Input capacitance	f = 1 MHz, V_F = 0 V	C_I		55		pF

Output

Parameter	Test condition	Symbol	Min	Typ.	Max	Unit
High level supply current (single channel)	V_E = 0.5 V, I_F = 0 mA	I_{CCH}		4.1	7.0	mA
	V_E = V_{CC}, I_F = 0 mA	I_{CCH}		3.3	6.0	mA
High level supply current (dual channel)	I_F = 0 mA	I_{CCH}		6.5	12.0	mA
Low level supply current (single channel)	V_E = 0.5 V, I_F = 10 mA	I_{CCL}		4.0	7.0	mA
	V_E = V_{CC}, I_F = 10 mA	I_{CCL}		3.3	6.0	mA
Low level supply current (dual channel)	I_F = 10 mA	I_{CCL}		6.5	12.0	mA
High level output current	V_E = 2.0 V, V_O = 5.5 V, I_F = 250 µA	I_{OH}		0.002	1	µA
Low level output voltage	V_E = 2.0 V, I_F = 5 mA, I_{OL} (sinking) = 13 mA	V_{OL}		0.2	0.6	V
Input threshold current	V_E = 2.0 V, V_O = 5.5 V, I_{OL} (sinking) = 13 mA	I_{TH}		2.4	5.0	mA
High level enable current	V_E = 2.0 V	I_{EH}		- 0.6	- 1.6	mA
Low level enable current	V_E = 0.5 V	I_{EL}		- 0.8	- 1.6	mA
High level enable voltage		V_{EH}	2.0			V
Low level enable voltage		V_{EL}			0.8	V

Switching Characteristics

Over Recommended Temperature (T_a = - 40 to + 100 °C), V_{CC} = 5 V, I_F = 7.5 mA unless otherwise specified.
All Typicals at T_a = 25 °C, V_{CC} = 5 V.

Parameter	Test condition	Symbol	Min	Typ.	Max	Unit
Propagation delay time to high output level	R_L = 350 Ω, C_L = 15 pF	t_{PLH}	20	48	100	ns
Propagation delay time to low output level	R_L = 350 Ω, C_L = 15 pF	t_{PHL}	25	50	100	ns
Pulse width distortion	R_L = 350 Ω, C_L = 15 pF	$\lvert t_{PHL} - t_{PLH} \rvert$		2.9	35	ns
Propagation delay skew	R_L = 350 Ω, C_L = 15 pF	t_{PSK}		8	40	ns

Parameter	Test condition	Symbol	Min	Typ.	Max	Unit
Output rise time (10 - 90 %)	R_L = 350 Ω, C_L = 15 pF	t_r		23		ns
Output fall time (90 - 10 %)	R_L = 350 Ω, C_L = 15 pF	t_f		7		ns
Propagation delay time of enable from V_{EH} to V_{EL}	R_L = 350 Ω, C_L = 15 pF, V_{EL} = 0 V, V_{EH} = 3 V	t_{ELH}		12		ns
Propagation delay time of enable from V_{EL} to V_{EH}	R_L = 350 Ω, C_L = 15 pF, V_{EL} = 0 V, V_{EH} = 3 V	t_{EHL}		11		ns

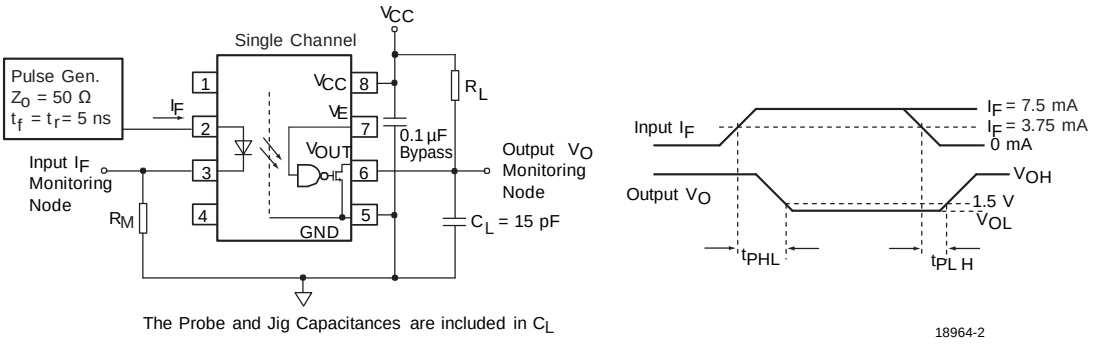

Figure 1. Single Channel Test Circuit for t_{PLH}, t_{PHL}, t_r and t_f

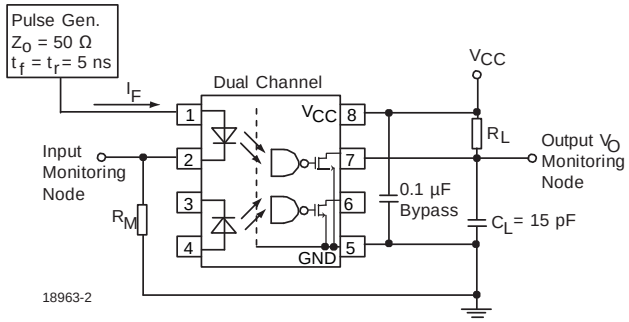

Figure 2. Dual Channel Test Circuit for t_{PLH}, t_{PHL}, t_r and t_f

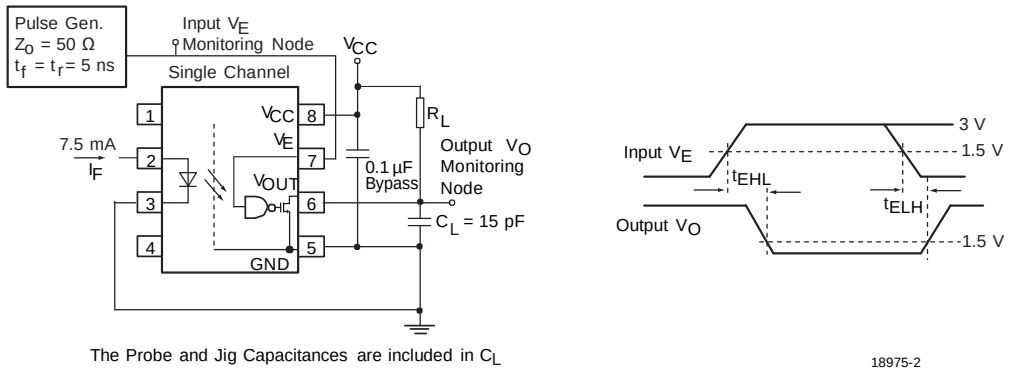

Figure 3. Single Channel Test Circuit for t_{EHL} and t_{ELH}

Common Mode Transient Immunity

Parameter	Test condition	Symbol	Min	Typ.	Max	Unit
Common mode transient immunity (high)	$\|V_{CM}\|$ = 10 V, V_{CC} = 5 V, I_F = 0 mA, $V_{O(min)}$ = 2 V, R_L = 350 Ω, T_{amb} = 25 °C [1]	$\|CM_H\|$	100			V/µs
	$\|V_{CM}\|$ = 50 V, V_{CC} = 5 V, I_F = 0 mA, $V_{O(min)}$ = 2 V, R_L = 350 Ω, T_{amb} = 25 °C [2]	$\|CM_H\|$	5000	10000		V/µs
	$\|V_{CM}\|$ = 1 kV, V_{CC} = 5 V, I_F = 0 mA, $V_{O(min)}$ = 2 V, R_L = 350 Ω, T_{amb} = 25 °C [3]	$\|CM_H\|$	10000	15000		V/µs
	$\|V_{CM}\|$ = 10 V, V_{CC} = 5 V, I_F = 7.5 mA, $V_{O(max)}$ = 0.8 V, R_L = 350 Ω, T_{amb} = 25 °C [1]	$\|CM_L\|$	100			V/µs
	$\|V_{CM}\|$ = 50 V, V_{CC} = 5 V, I_F = 7.5 mA, $V_{O(max)}$ = 0.8 V, R_L = 350 Ω, T_{amb} = 25 °C [2]	$\|CM_L\|$	5000	10000		V/µs
	$\|V_{CM}\|$ = 1 kV, V_{CC} = 5 V, I_F = 7.5 mA, $V_{O(max)}$ = 0.8 V, R_L = 350 Ω, T_{amb} = 25 °C [3]	$\|CM_L\|$	10000	15000		V/µs

[1] For SFH6745T and SFH6755T

[2] For SFH6746T and SFH6756T

[3] For SFH6747T and SFH6757T

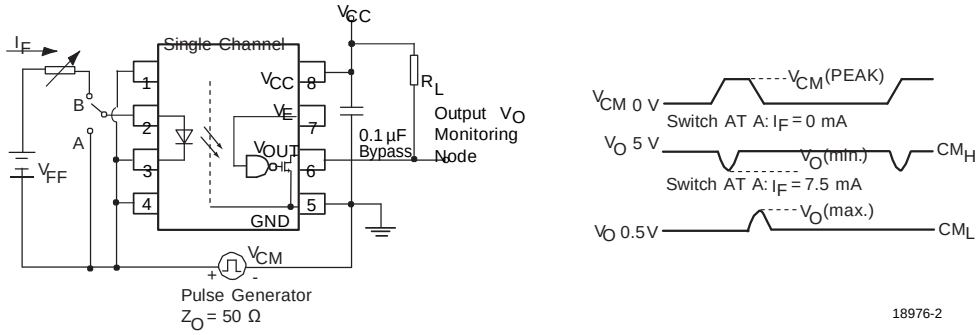

Figure 4. Single Channel Test Circuit for Common Mode Transient Immunity

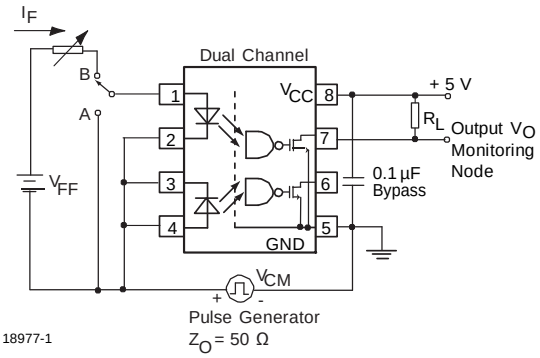

Figure 5. Dual Channel Test Circuit for Common Mode Transient Immunity

Safety and Insulation Ratings

As per IEC60747-5-2, §7.4.3.8.1, this optocoupler is suitable for "safe electrical insulation" only within the safety ratings. Compliance with the safety ratings shall be ensured by means of protective circuits.

Parameter	Test condition	Symbol	Min	Typ.	Max	Unit
Climatic Classification (according to IEC 68 part 1)				55/110/21		
Comparative Tracking Index		CTI	175		399	
V_{IOTM}			5000			V
V_{IORM}			560			V
P_{SO}					350	mW
I_{SI}					150	mA
T_{SI}					165	°C
Creepage			4			mm
Clearance			4			mm
Insulation thickness, reinforced rated	per IEC60950 2.10.5.1		0.2			mm

Typical Characteristics (Tamb = 25 °C unless otherwise specified)

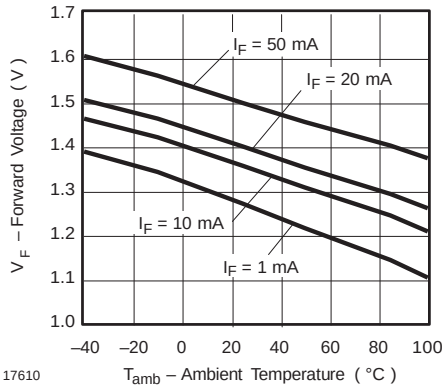

Figure 6. Forward Voltage vs. Ambient Temperature

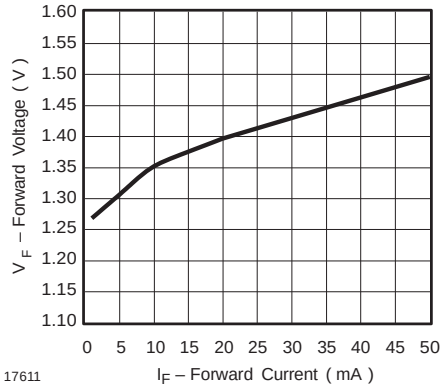

Figure 7. Forward Voltage vs. Forward Current

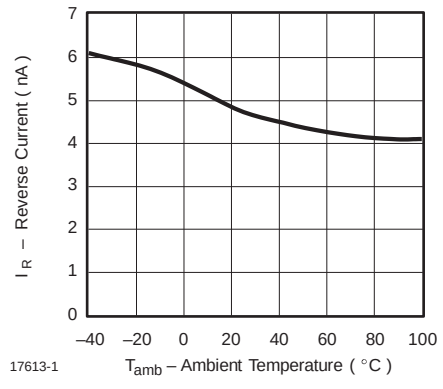

Figure 8. Reverse Current vs. Ambient Temperature

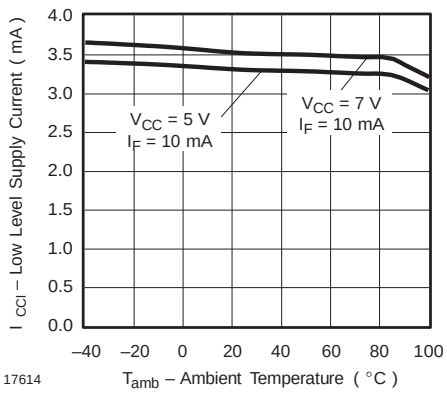

Figure 9. Low Level Supply Current vs. Ambient Temperature

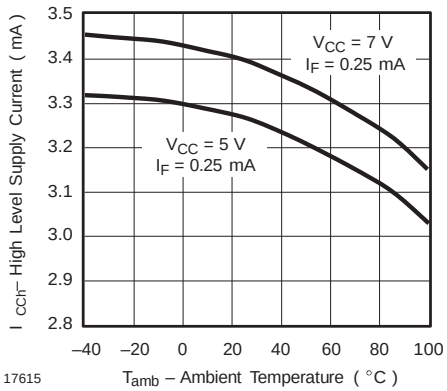

Figure 10. High Level Supply Current vs. Ambient Temperature

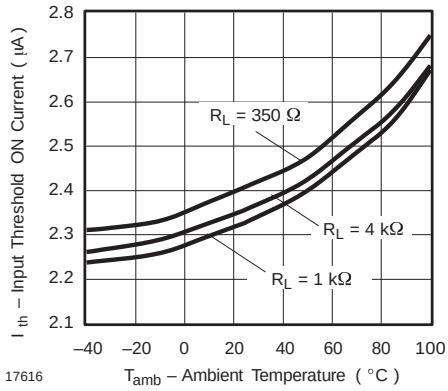

Figure 11. Input Threshold ON Current vs. Ambient Temperature

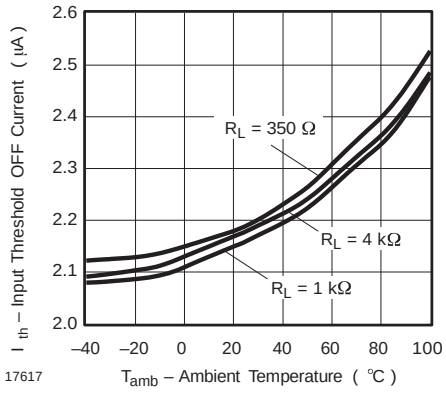

Figure 12. Input Threshold OFF Current vs. Ambient Temperature

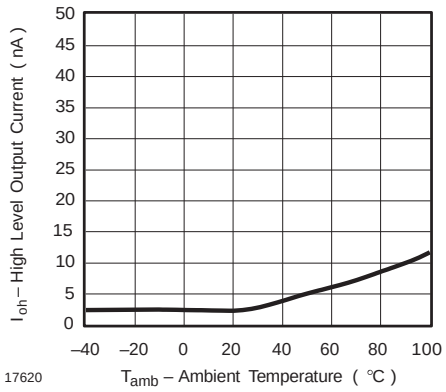

Figure 15. High Level Output Current vs. Ambient Temperature

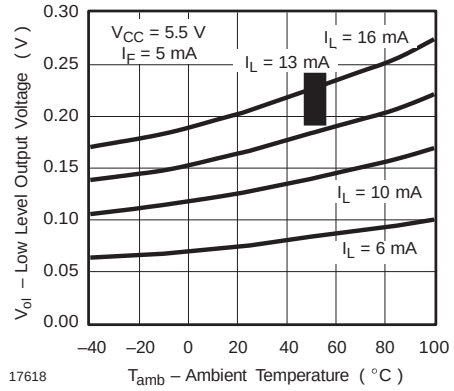

Figure 13. Low Level Output Voltage vs. Ambient Temperature

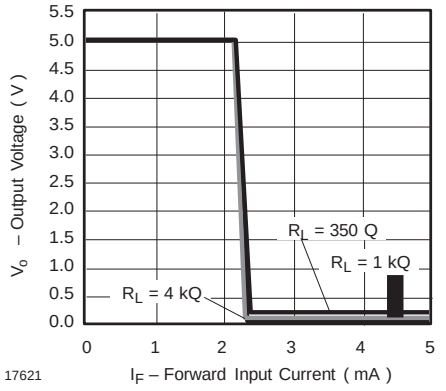

Figure 16. Output Voltage vs. Forward Input Current

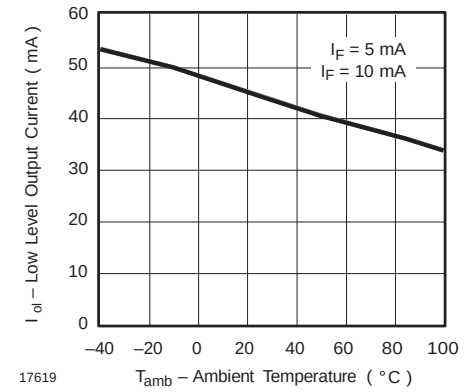

Figure 14. Low Level Output Current vs. Ambient Temperature

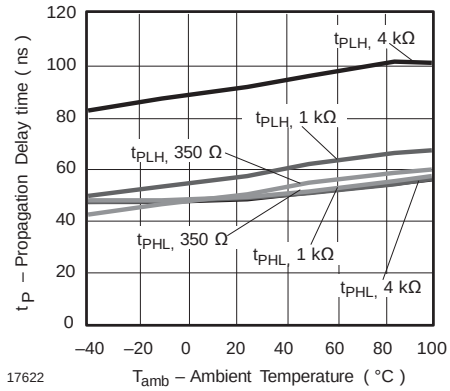

Figure 17. Propagation Delay vs. Ambient Temperature

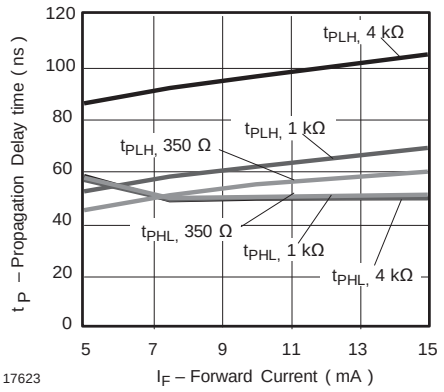

Figure 18. Propagation Delay vs. Forward Current

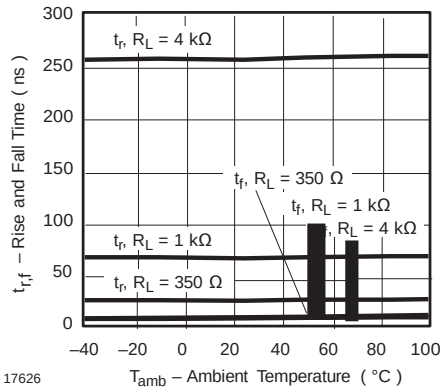

Figure 21. Rise and Fall Time vs. Ambient Temperature

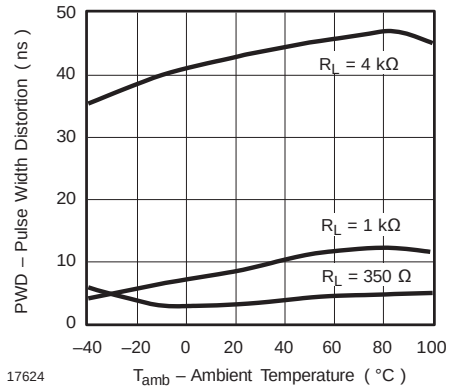

Figure 19. Pulse Width Distortion vs. Ambient Temperature

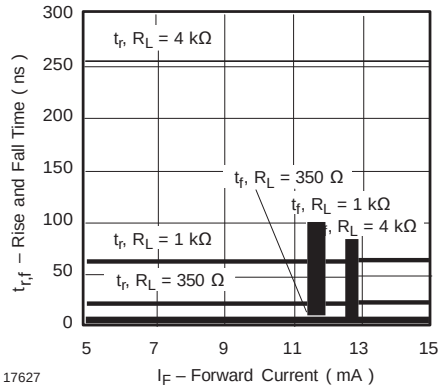

Figure 22. Rise and Fall Time vs. Forward Current

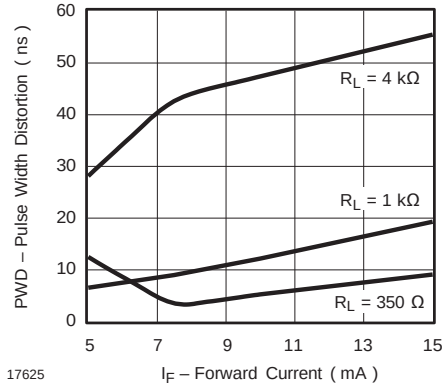

Figure 20. Pulse Width Distortion vs. Forward Current

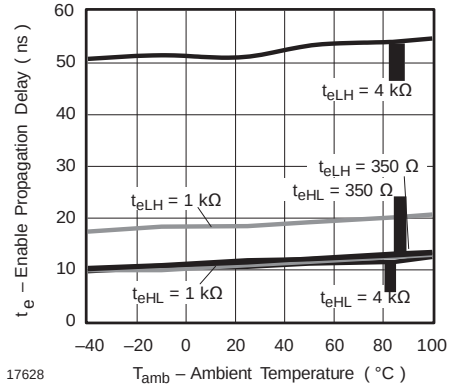

Figure 23. Enable Propagation Delay vs. Ambient Temperature

Package Dimensions in Inches (mm)

Single Channel SOIC-8

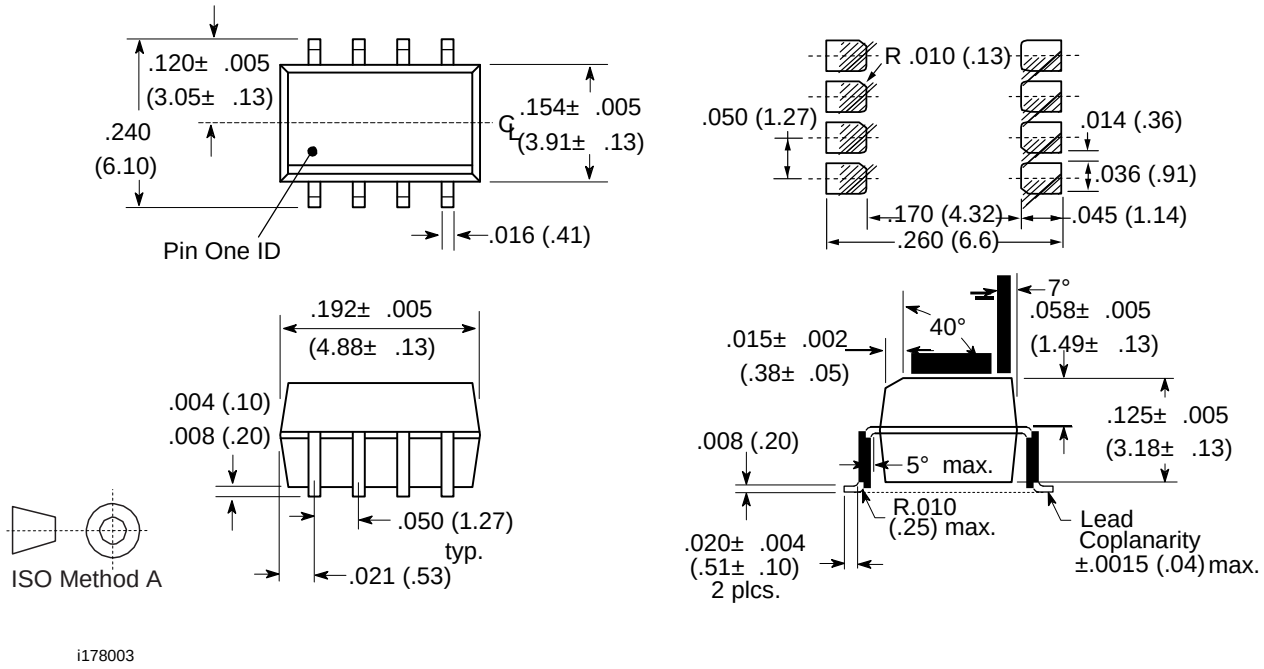

i178003

Dual Channel SOIC-8

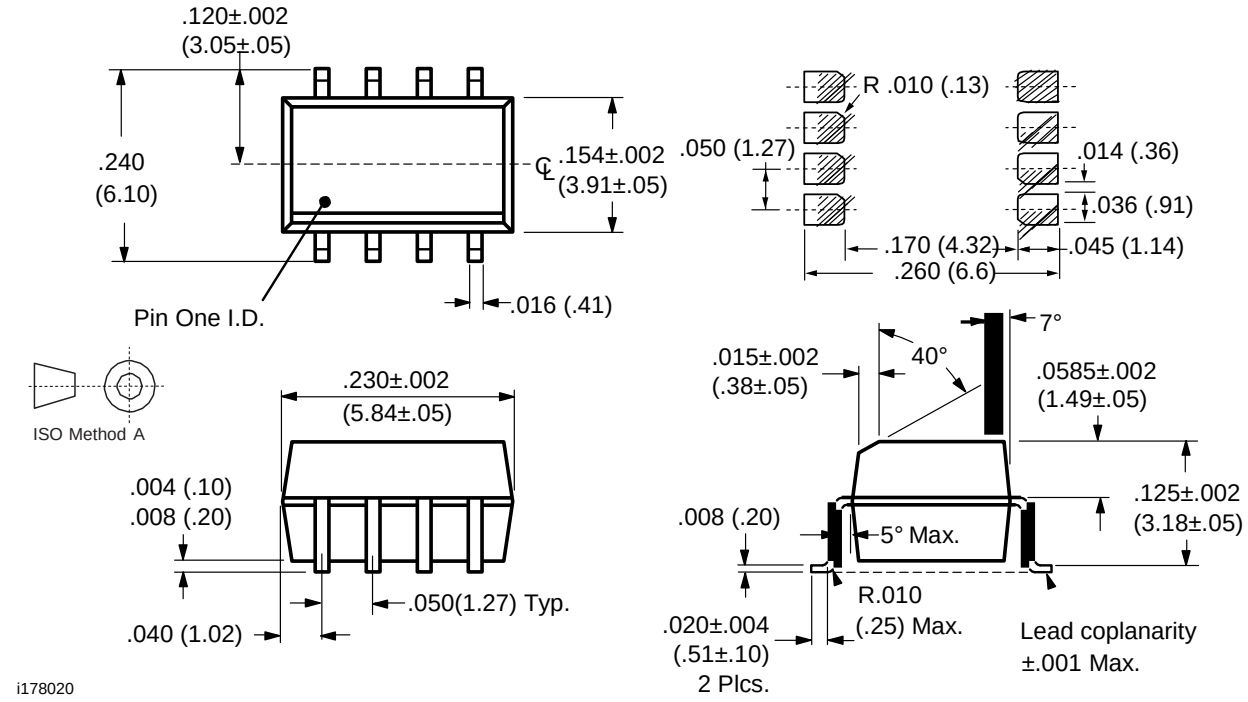

i178020

Ozone Depleting Substances Policy Statement

It is the policy of Vishay Semiconductor GmbH to

1. Meet all present and future national and international statutory requirements.
2. Regularly and continuously improve the performance of our products, processes, distribution and operating systems with respect to their impact on the health and safety of our employees and the public, as well as their impact on the environment.

It is particular concern to control or eliminate releases of those substances into the atmosphere which are known as ozone depleting substances (ODSs).

The Montreal Protocol (1987) and its London Amendments (1990) intend to severely restrict the use of ODSs and forbid their use within the next ten years. Various national and international initiatives are pressing for an earlier ban on these substances.

Vishay Semiconductor GmbH has been able to use its policy of continuous improvements to eliminate the use of ODSs listed in the following documents.

1. Annex A, B and list of transitional substances of the Montreal Protocol and the London Amendments respectively
2. Class I and II ozone depleting substances in the Clean Air Act Amendments of 1990 by the Environmental Protection Agency (EPA) in the USA
3. Council Decision 88/540/EEC and 91/690/EEC Annex A, B and C (transitional substances) respectively.

Vishay Semiconductor GmbH can certify that our semiconductors are not manufactured with ozone depleting substances and do not contain such substances.

We reserve the right to make changes to improve technical design
and may do so without further notice.
Parameters can vary in different applications. All operating parameters must be validated for each customer application by the customer. Should the buyer use Vishay Semiconductors products for any unintended or unauthorized application, the buyer shall indemnify Vishay Semiconductors against all claims, costs, damages, and expenses, arising out of, directly or indirectly, any claim of personal damage, injury or death associated with such unintended or unauthorized use.

Vishay Semiconductor GmbH, P.O.B. 3535, D-74025 Heilbronn, Germany
Telephone: 49 (0)7131 67 2831, Fax number: 49 (0)7131 67 2423