# IR-Lumineszenzdiode (850 nm) mit hoher Ausgangsleistung
# High Power Infrared Emitter (850 nm)
## Lead (Pb) Free Product - RoHS Compliant
## SFH 4236

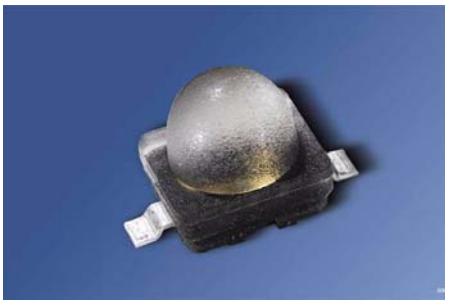

### Wesentliche Merkmale

- max. Gleichstrom 1 A
- niedriger Wärmewiderstand (9 K/W)
- Schwerpunktswellenlänge 850 nm
- ESD-sicher bis 2 kV nach JESD22-A114-E
- Erweiterte Korrosionsfestigkeit
  (s.a. Abschnitt Maßzeichnung)

### Features

- max. DC-current 1 A
- Low thermal resistance (9 K/W)
- Center of spectral emission at 850 nm
- ESD safe up to 2 kV acc. to JESD22-A114-E
- Superior Corrosion Robustness
  (see chapter package outlines)

### Anwendungen

- Infrarotbeleuchtung für Kameras
- Überwachungssysteme
- Fahrer-Assistenz Systeme
- Beleuchtung für Bilderkennungssysteme

### Applications

- Infrared Illumination for cameras
- Surveillance systems
- Driver assistance systems
- Machine vision systems

### Sicherheitshinweise

Je nach Betriebsart emittieren diese Bauteile hochkonzentrierte, nicht sichtbare Infrarot-Strahlung, die gefährlich für das menschliche Auge sein kann. Produkte, die diese Bauteile enthalten, müssen gemäß den Sicherheits-richtlinien der IEC-Normen 60825-1 und 62471 behandelt werden.

### Safety Advices

Depending on the mode of operation, these devices emit highly concentrated non visible infrared light which can be hazardous to the human eye. Products which incorporate these devices have to follow the safety precautions given in IEC 60825-1 and IEC 62471.

| **Typ**<br>**Type** | **Bestellnummer**<br>**Ordering Code** | **Strahlstärkegruppierung**[1] ($I_F$ = 1 A, $t_p$ = 10 ms)<br>**Radiant Intensity Grouping**[1]<br>$I_e$ (mW/sr) |
|---|---|---|
| SFH 4236 | Q65110A9564 | > 250 (typ. 630) |

[1] gemessen bei einem Raumwinkel Ω = 0.01 sr / measured at a solid angle of Ω = 0.01 sr



OSRAM
Opto Semiconductors

**Grenzwerte** ($T_A$ = 25 °C)
**Maximum Ratings**

| Bezeichnung<br>Parameter | Symbol<br>Symbol | Wert<br>Value | Einheit<br>Unit |
|---|---|---|---|
| Betriebs- und Lagertemperatur<br>Operating and storage temperature range | $T_{op}$ , $T_{stg}$ | – 40 … + 125 | °C |
| Sperrschichttemperatur<br>Junction temperature | $T_J$ | + 145 | °C |
| Sperrspannung<br>Reverse voltage | $V_R$ | 1 | V |
| Vorwärtsgleichstrom<br>Forward current | $I_F$ | 1 | A |
| Stoßstrom, $t_p$ < 200 µs, $D$ = 0<br>Surge current | $I_{FSM}$ | 5 | A |
| Leistungsaufnahme<br>Power consumption | $P_{tot}$ | 1.8 | W |
| Wärmewiderstand Sperrschicht - Lötstelle<br>Thermal resistance junction - soldering point | $R_{thJS}$ | 9 | K/W |

**Kennwerte** ($T_A$ = 25 °C)
**Characteristics**

| Bezeichnung<br>Parameter | Symbol<br>Symbol | Wert<br>Value | Einheit<br>Unit |
|---|---|---|---|
| Wellenlänge der Strahlung<br>Wavelength at peak emission<br>$I_F$ = 1 A, $t_p$ = 10 ms | $\lambda_{peak}$ | 860 | nm |
| Centroid-Wellenlänge der Strahlung<br>Centroid wavelength<br>$I_F$ = 1 A, $t_p$ = 10 ms | $\lambda_{centroid}$ | 850 | nm |
| Spektrale Bandbreite bei 50% von $I_{max}$<br>Spectral bandwidth at 50% of $I_{max}$<br>$I_F$ = 1 A, $t_p$ = 10 ms | $\Delta\lambda$ | 30 | nm |
| Abstrahlwinkel<br>Half angle | $\varphi$ | ± 20 | Grad<br>deg. |
| Aktive Chipfläche<br>Active chip area | $A$ | 1 | $mm^2$ |
| Abmessungen der aktiven Chipfläche<br>Dimension of the active chip area | $L \times B$<br>$L \times W$ | 1 × 1 | $mm^2$ |



OSRAM
Opto Semiconductors

**Kennwerte** ($T_A$ = 25 °C)
**Characteristics** (cont'd)

| **Bezeichnung**<br>**Parameter** | **Symbol**<br>**Symbol** | **Wert**<br>**Value** | **Einheit**<br>**Unit** |
|---|---|---|---|
| Schaltzeiten, $I_e$ von 10% auf 90% und von 90% auf 10%, $I_F$ = 5 A, $R_L$ = 50 Ω<br>Switching times, $I_e$ from 10% to 90% and from 90% to 10%, $I_F$ = 5 A, $R_L$ = 50 Ω | $t_r$ / $t_f$ | 7 / 14 | ns |
| Durchlassspannung<br>Forward voltage<br>$I_F$ = 1 A, $t_p$ = 100 µs<br>$I_F$ = 5 A, $t_p$ = 100 µs | <br><br>$V_F$<br>$V_F$ | <br><br>1.5 (< 1.8)<br>2.0 (< 2.9) | <br><br>V<br>V |
| Gesamtstrahlungsfluss<br>Total radiant flux<br>$I_F$ = 1 A, $t_p$ = 100 µs | $\Phi_e$ | 530 | mW |
| Temperaturkoeffizient von $I_e$ bzw. $\Phi_e$<br>Temperature coefficient of $I_e$ or $\Phi_e$<br>$I_F$ = 1 A, $t_p$ = 10 ms | $TC_I$ | – 0.3 | %/K |
| Temperaturkoeffizient von $V_F$<br>Temperature coefficient of $V_F$<br>$I_F$ = 1 A, $t_p$ = 10 ms | $TC_V$ | – 1 | mV/K |
| Temperaturkoeffizient von λ<br>Temperature coefficient of λ<br>$I_F$ = 1 A, $t_p$ = 10 ms | $TC_{\lambda,centroid}$ | + 0.3 | nm/K |



OSRAM
Opto Semiconductors

**Strahlstärke $I_e$ in Achsrichtung**[1)]
gemessen bei einem Raumwinkel $\Omega$ = 0.01 sr
**Radiant Intensity $I_e$ in Axial Direction**
at a solid angle of $\Omega$ = 0.01 sr

| Bezeichnung<br>Parameter | Symbol | Werte<br>Values | | | | Einheit<br>Unit |
|---|---|---|---|---|---|---|
| | | -CW | -DA | -DB | -EW | |
| Strahlstärke<br>Radiant intensity<br>$I_F$ = 1 A, $t_p$ = 10 ms | $I_{e\ min}$<br>$I_{e\ max}$ | 250<br>500 | 400<br>630 | 500<br>800 | 630<br>1250 | mW/sr<br>mW/sr |

1) Nur eine Gruppe in einer Verpackungseinheit/
Only one group in one packing unit

**Abstrahlcharakteristik**
**Radiation Characteristics** $I_{rel} = f(\varphi)$

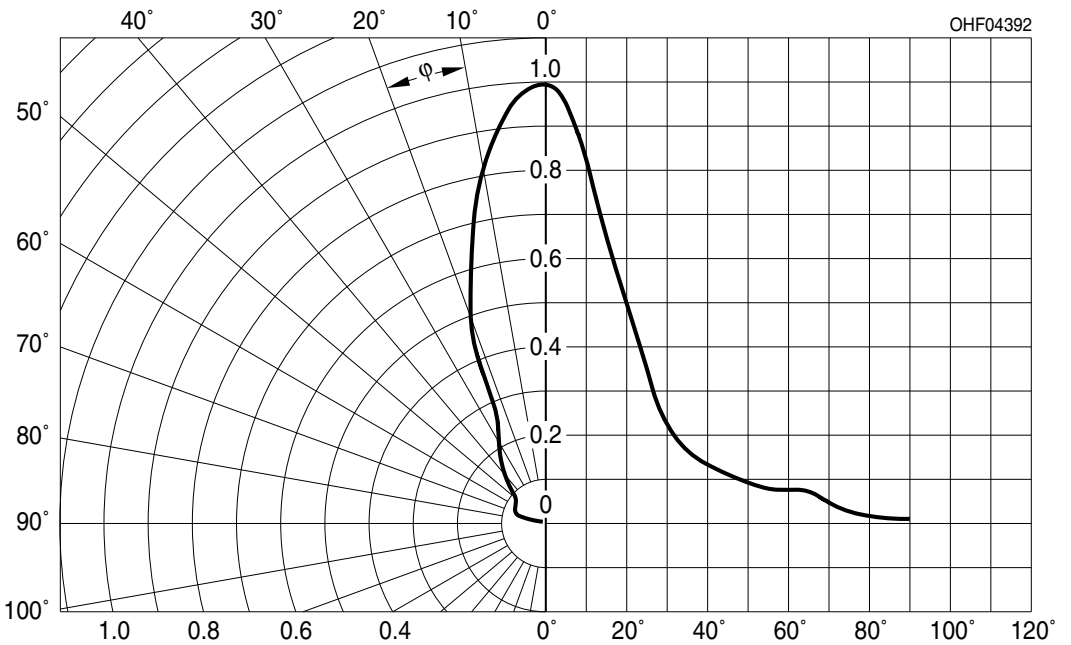




OSRAM
Opto Semiconductors

**Relative spektrale Emission**
**Relative Spectral Emission**
$I_{rel} = f(\lambda)$

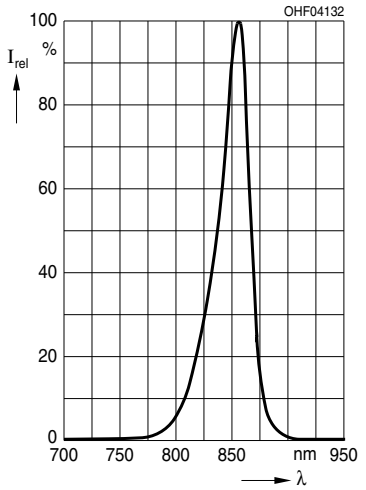


**Durchlassstrom**
**Forward Current**
$I_F = f(V_F)$
Single pulse, $t_p$ = 100 µs

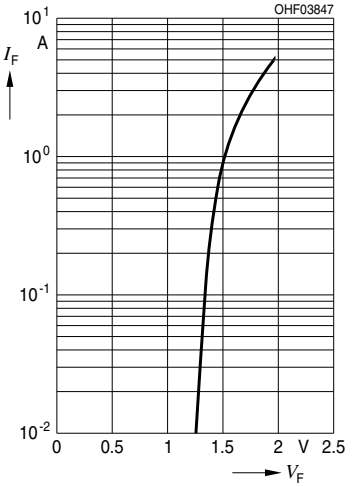


**Relativer Gesamtstrahlungsfluss**
**Relative Total Radiant Flux**
$\Phi_e/\Phi_e(1000mA) = f(I_F)$
Single pulse, $t_p$ = 100 µs

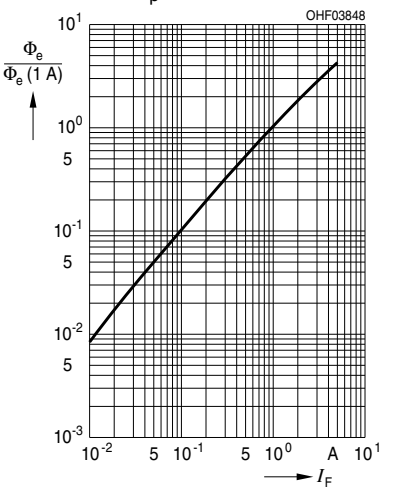


**Max. zulässiger Durchlassstrom**
**Max. Permissible Forward Current**
$I_F = f(T_A)$, $R_{thJS}$ = 9 K/W

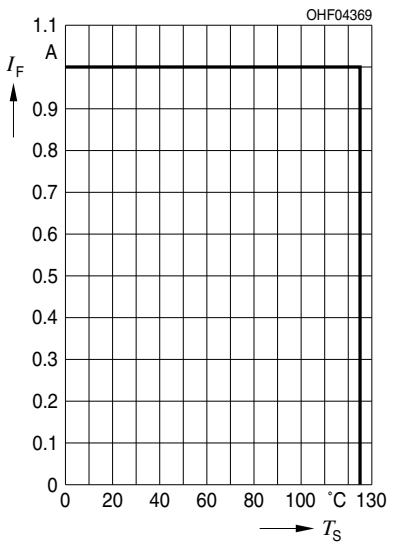


**Zulässige Impulsbelastbarkeit**
**Permissible Pulse Handling Capability** $I_F = f(t_p)$, $T_S$ = 85 °C,
Duty cycle $D$ = parameter

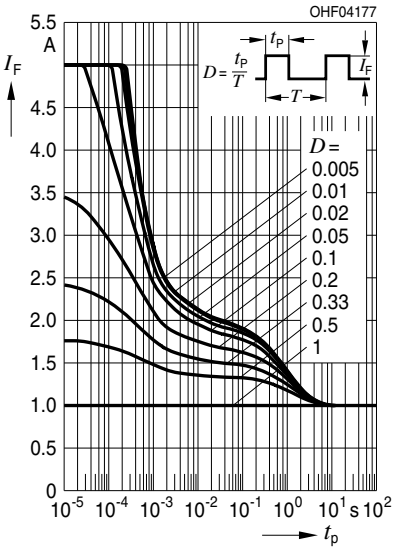




OSRAM
Opto Semiconductors

## Maßzeichnung
## Package Outlines

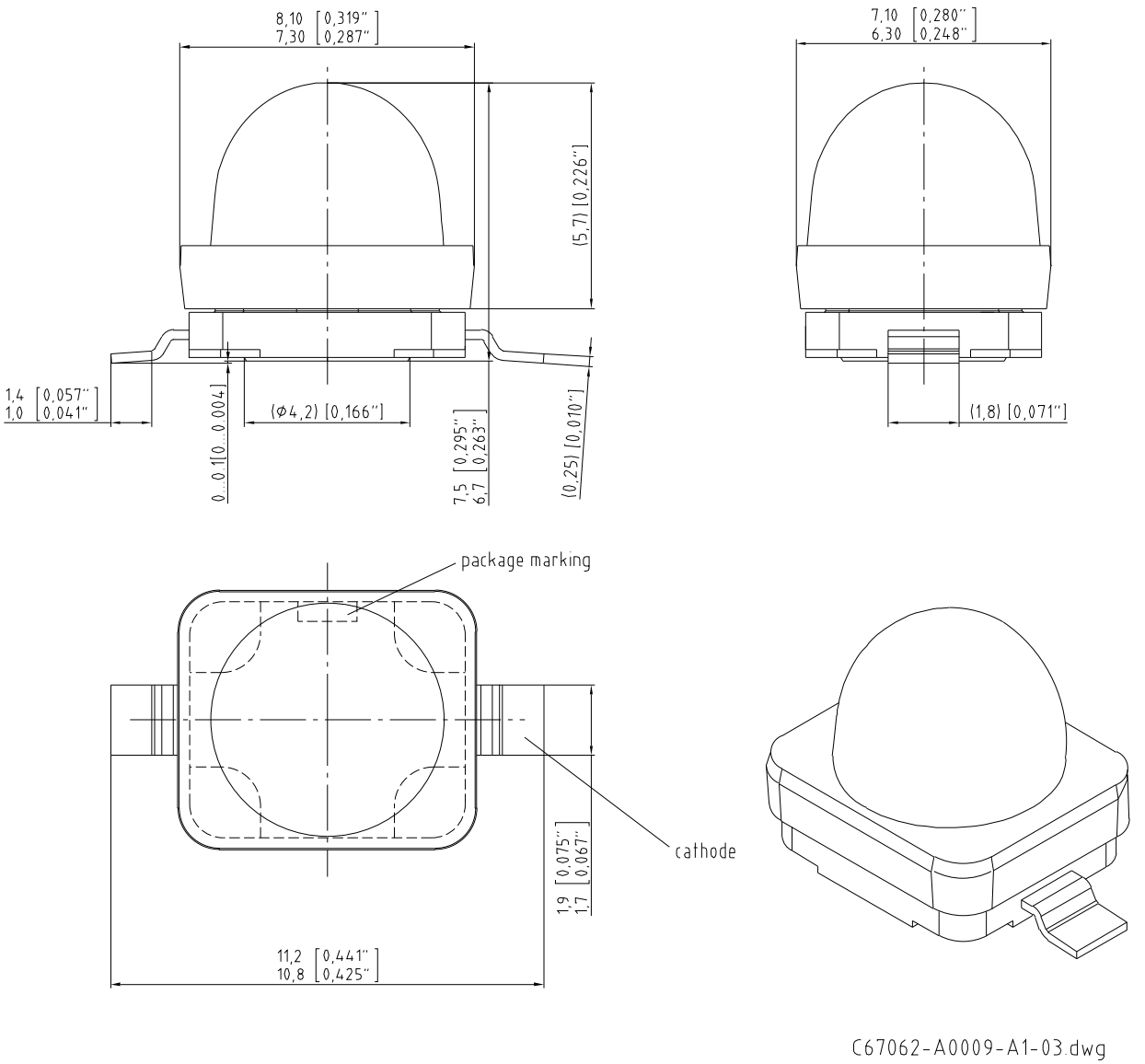


Maße in mm (inch) / Dimensions in mm (inch).

**Korrosionsfestigkeit besser als EN 60068-2-60 (method 4):**
mit erweitertem Korrosionstest: 40°C / 90%rh / 15ppm H2S / 336h

**Corrosion robustness better than EN 60068-2-60 (method 4):**
with enhanced corrosion test: 40°C / 90%rh / 15ppm H2S / 336h



OSRAM
Opto Semiconductors

## Empfohlenes Lötpaddesign
## Recommended Solder Pad Design

**Achtung:**
Anode und Heatsink sind elektrisch verbunden

**Attention:**
Anode and Heatsink are electrically connected

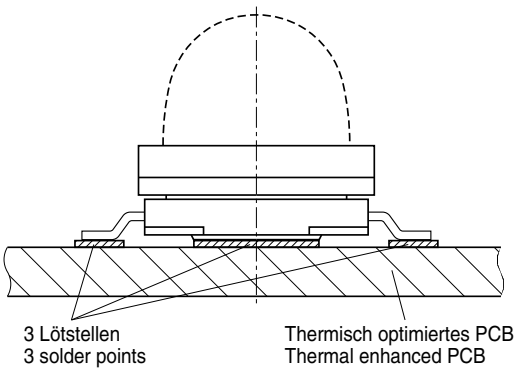


Footprint

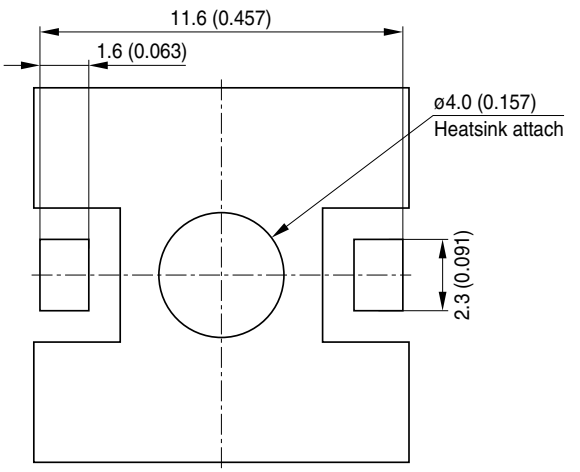


Empfohlene Padgeometrie

Recommended Solder Pad Design

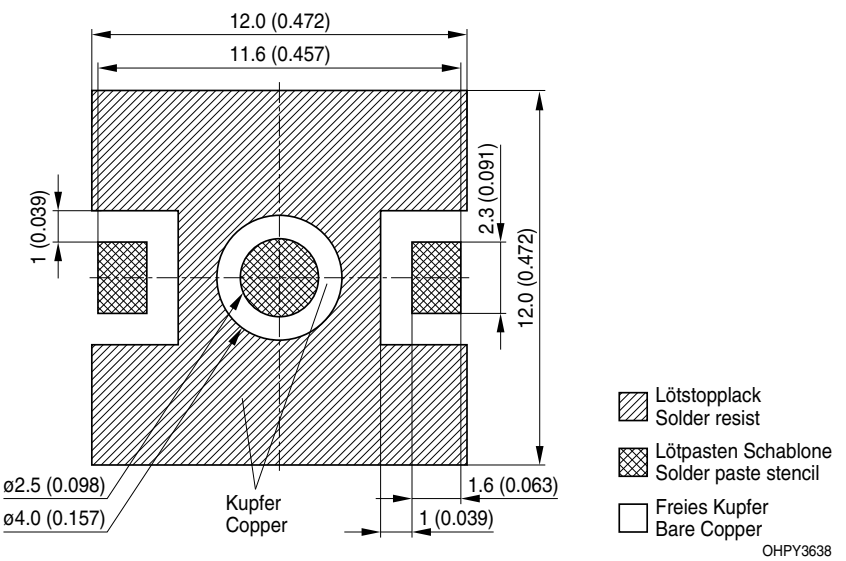


Maße in mm (inch) / Dimensions in mm (inch).



OSRAM
Opto Semiconductors

**Lötbedingungen**
**Soldering Conditions**
**Reflow Lötprofil für bleifreies Löten**
**Reflow Soldering Profile for lead free soldering**

Vorbehandlung nach JEDEC Level 2
Preconditioning acc. to JEDEC Level 2
(nach J-STD-020C)
(acc. to J-STD-020C)

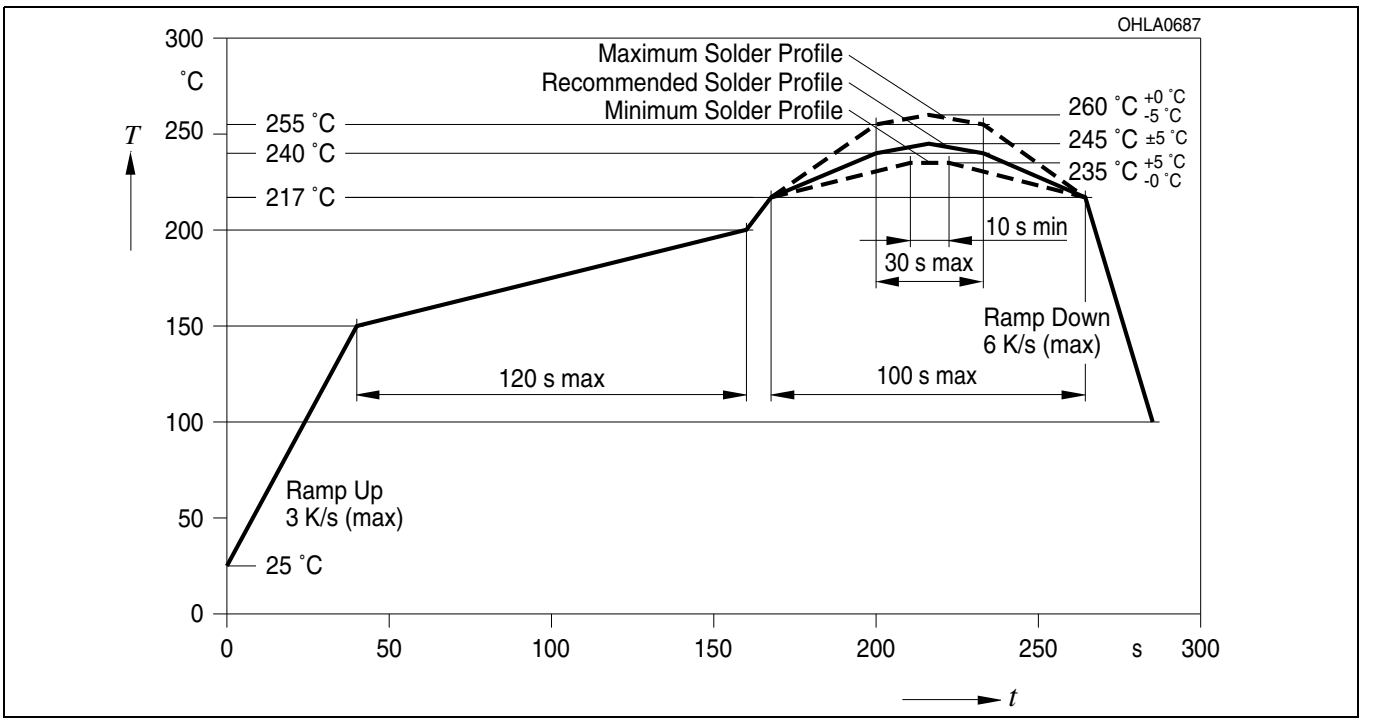


Anm.: Das Gehäuse ist für Ultraschallreinigung nicht geeignet

Note: Package not suitable for ultra sonic cleaning

**Published by**
**OSRAM Opto Semiconductors GmbH**
**Leibnizstraße 4, D-93055 Regensburg**
**www.osram-os.com**
**© All Rights Reserved.**

EU RoHS and China RoHS compliant product

此产品符合欧盟 RoHS 指令的要求；

按照中国的相关法规和标准，不含有毒有害物质或元素。

The information describes the type of component and shall not be considered as assured characteristics.
Terms of delivery and rights to change design reserved. Due to technical requirements components may contain dangerous substances. For information on the types in question please contact our Sales Organization.

**Packing**

Please use the recycling operators known to you. We can also help you – get in touch with your nearest sales office. By agreement we will take packing material back, if it is sorted. You must bear the costs of transport. For packing material that is returned to us unsorted or which we are not obliged to accept, we shall have to invoice you for any costs incurred.

**Components used in life-support devices or systems must be expressly authorized for such purpose!** Critical components [1] , may only be used in life-support devices or systems [2] with the express written approval of OSRAM OS.

[1] A critical component is a component usedin a life-support device or system whose failure can reasonably be expected to cause the failure of that life-support device or system, or to affect its safety or effectiveness of that device or system.

[2] Life support devices or systems are intended (a) to be implanted in the human body, or (b) to support and/or maintain and sustain human life. If they fail, it is reasonable to assume that the health of the user may be endangered.



OSRAM Opto Semiconductors

# Mouser Electronics

## Related Product Links

720-SFH4236 - Osram Opto Semiconductor SFH 4236