# Silicon PN Photodiode with $V_\lambda$ Characteristics
# Version 1.1

## SFH 2716

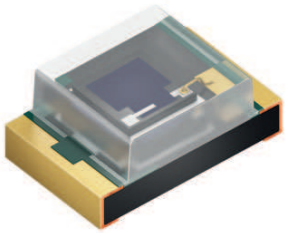

**Features:**
- Very small SMT package
- SMT package 0805, colorless clear resin, 2 mm x 1.25 mm x 0.8 mm
- **Special:** Adapted to human eye sensitivity ($V_\lambda$)
- **Spectral range of sensitivity:** (typ) 350 ... 1000 nm

**Applications**
- For control and drive circuits
- Ambient light detector
- Exposure meter for daylight and artificial light
- Sensor for backlight-dimming

**Ordering Information**

| Type: | Photocurrent<br>$I_P$ [µA]<br>$V_{CE}$ = 5 V, white LED 1000 lx | Ordering Code |
|---|---|---|
| SFH 2716 | 0.57 (≥0.4) | Q65112A0955 |



OSRAM
Opto Semiconductors

**Maximum Ratings** ($T_A$ = 25 °C)

| Parameter | Symbol | Values | Unit |
|---|---|---|---|
| Operating and storage temperature range | $T_{op}$; $T_{stg}$ | -40 ... 100 | °C |
| Reverse voltage | $V_R$ | 16 | V |
| ESD withstand voltage (acc. to ANSI/ ESDA/ JEDEC JS-001 - HBM) | $V_{ESD}$ | 2000 | V |

**Characteristics** ($T_A$ = 25 °C)

| Parameter | | Symbol | Values | Unit |
|---|---|---|---|---|
| Photocurrent ($V_{CE}$ = 5 V, white LED 1000 lx) | (typ (min)) | $I_P$ | 0.57 (≥0.4) | µA |
| Wavelength of max. sensitivity | (typ) | $\lambda_{S\,max}$ | 620 | nm |
| Spectral range of sensitivity | (typ) | $\lambda_{10\%}$ | (typ) 350 ... 1000 | nm |
| Radiant sensitive area | (typ) | A | 0.35 | $mm^2$ |
| Dimensions of radiant sensitive area | (typ) | L x W | 0.59 x 0.59 | mm x mm |
| Half angle | (typ) | φ | ± 60 | ° |
| Dark current ($V_R$ = 5 V) | (typ (max)) | $I_R$ | 0.01 (≤ 5) | nA |
| Capacitance ($V_R$ = 0 V, f = 1 MHz, E = 0) | (typ) | $C_0$ | 23 | pF |



OSRAM Opto Semiconductors

**Relative Spectral Sensitivity** [1] *page 11*

$S_{rel} = f(\lambda)$

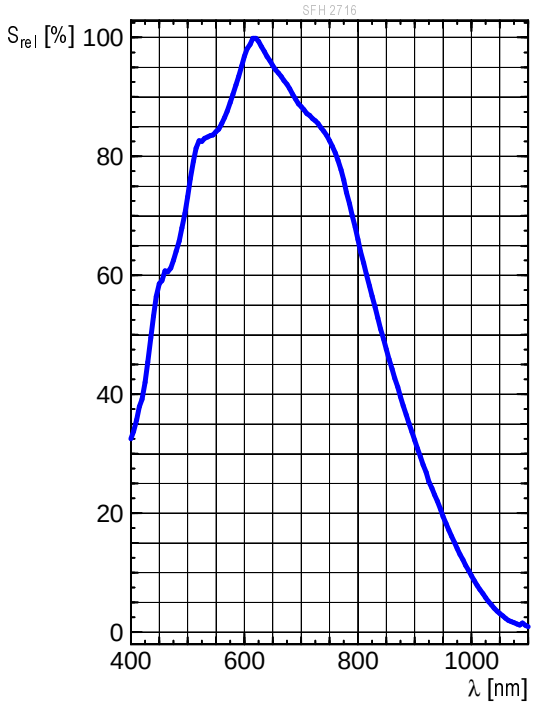


**Dark Current** [1] *page 11*

$I_R = f(V_R)$, E = 0

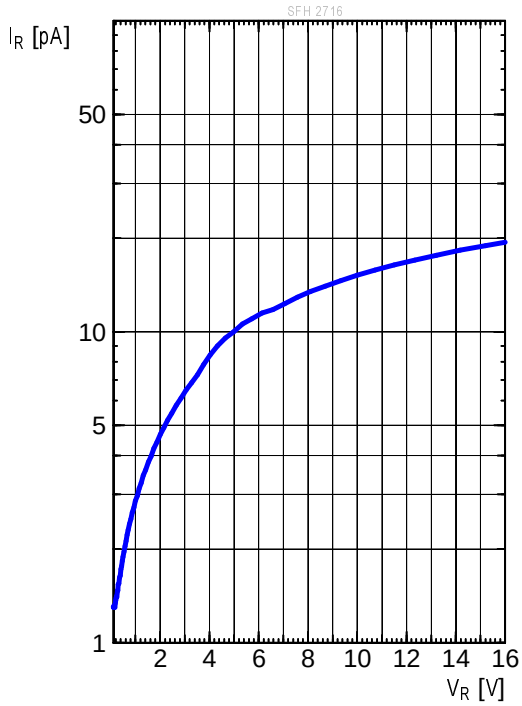


**Capacitance** [1] *page 11*

C = $f(V_R)$, f = 1 MHz, E = 0

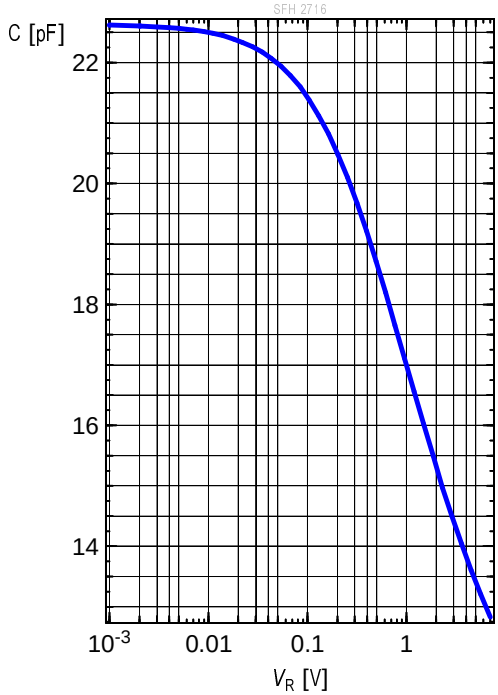




OSRAM
Opto Semiconductors

## Directional Characteristics [1] *page 11*

$S_{rel} = f(\phi)$

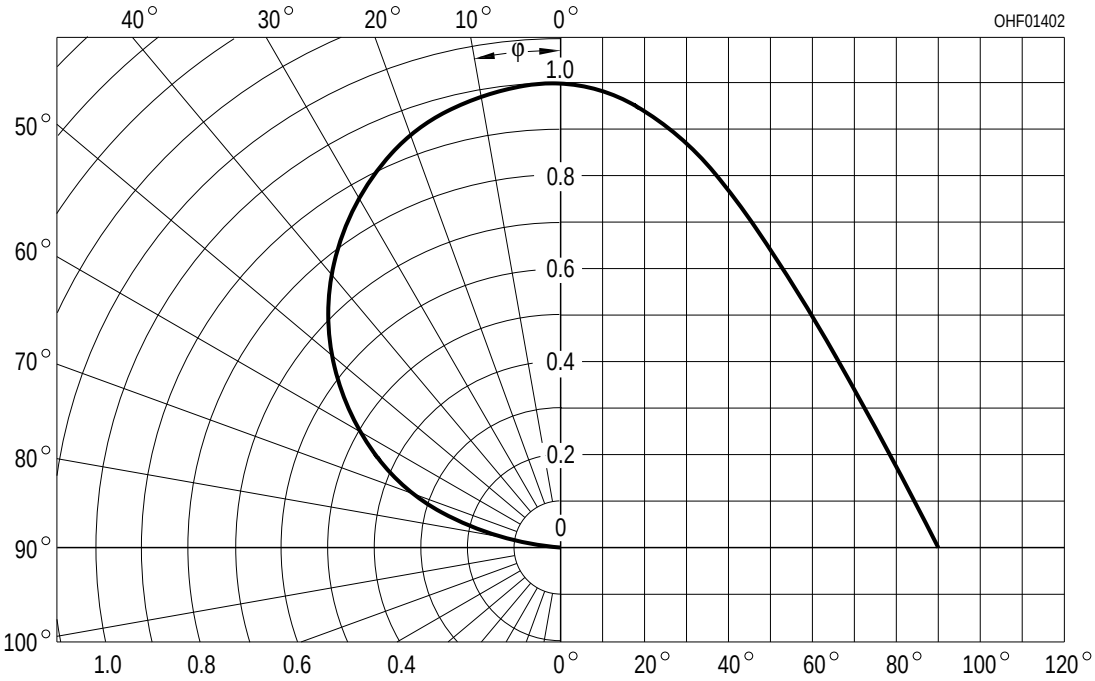


## Package Outline

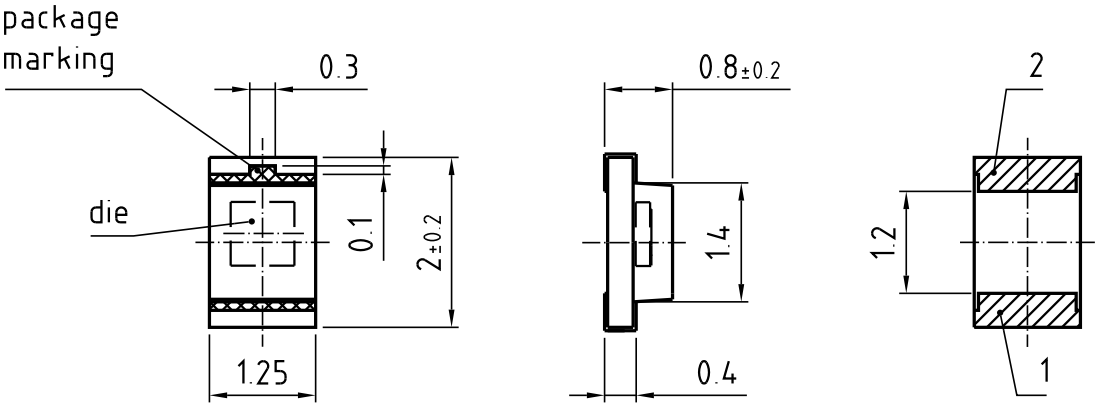


general tolerance ± 0.1
lead finish Au

C63062-A4309-A2-01

*Dimensions in mm (inch).*



OSRAM Opto Semiconductors

### Pinning

| Pin | Description |
|---|---|
| 1 | Anode |
| 2 | Cathode |

**Approximate Weight:**
4 mg

**Recommended Solder Pad**

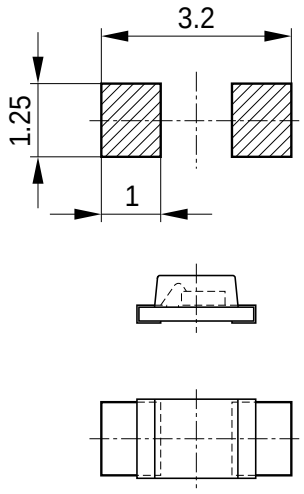


Bauteil positioniert
Component location on pad

OHFP2578

Dimensions in mm.



OSRAM
Opto Semiconductors

**Reflow Soldering Profile**

Product complies to MSL Level 3 acc. to JEDEC J-STD-020E

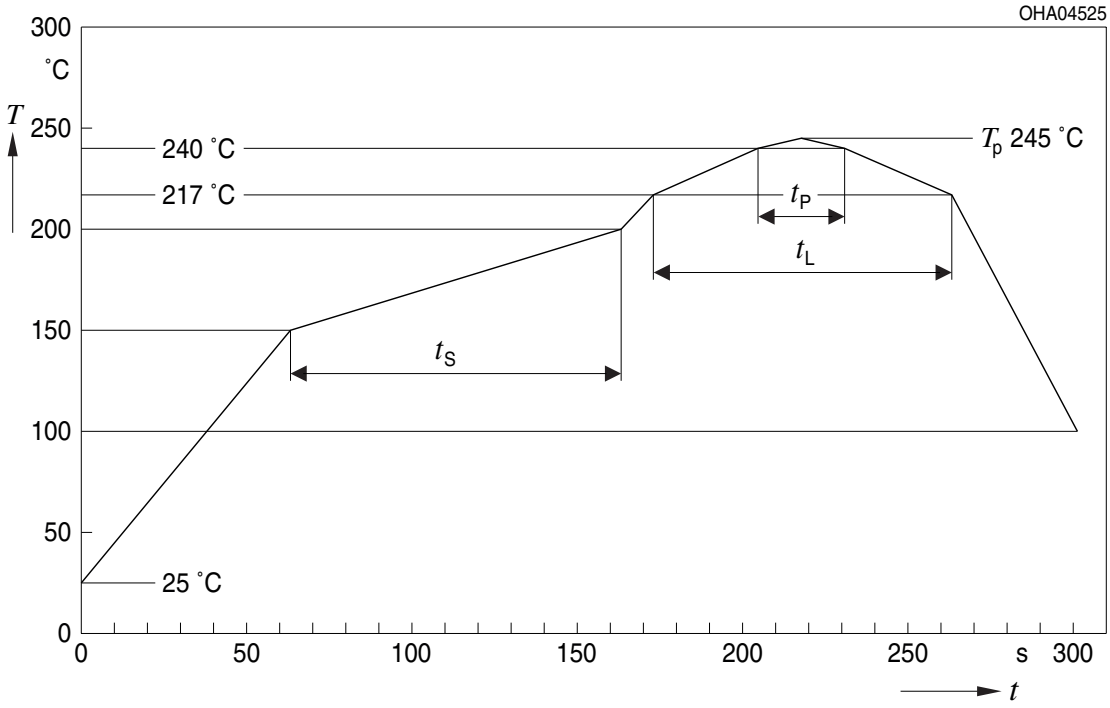


OHA04612

| Profile Feature<br>Profil-Charakteristik | Symbol<br>Symbol | Pb-Free (SnAgCu) Assembly | | | Unit<br>Einheit |
|---|---|---|---|---|---|
| | | Minimum | Recommendation | Maximum | |
| Ramp-up rate to preheat*)<br>25 °C to 150 °C | | | 2 | 3 | K/s |
| Time $t_S$<br>$T_{Smin}$ to $T_{Smax}$ | $t_S$ | 60 | 100 | 120 | s |
| Ramp-up rate to peak*)<br>$T_{Smax}$ to $T_P$ | | | 2 | 3 | K/s |
| Liquidus temperature | $T_L$ | | 217 | | °C |
| Time above liquidus temperature | $t_L$ | | 80 | 100 | s |
| Peak temperature | $T_P$ | | 245 | 260 | °C |
| Time within 5 °C of the specified peak temperature $T_P$ - 5 K | $t_P$ | 10 | 20 | 30 | s |
| Ramp-down rate*<br>$T_P$ to 100 °C | | | 3 | 6 | K/s |
| Time<br>25 °C to $T_P$ | | | | 480 | s |

All temperatures refer to the center of the package, measured on the top of the component

* slope calculation DT/Dt: Dt max. 5 s; fulfillment for the whole T-range



OSRAM
Opto Semiconductors

### Taping

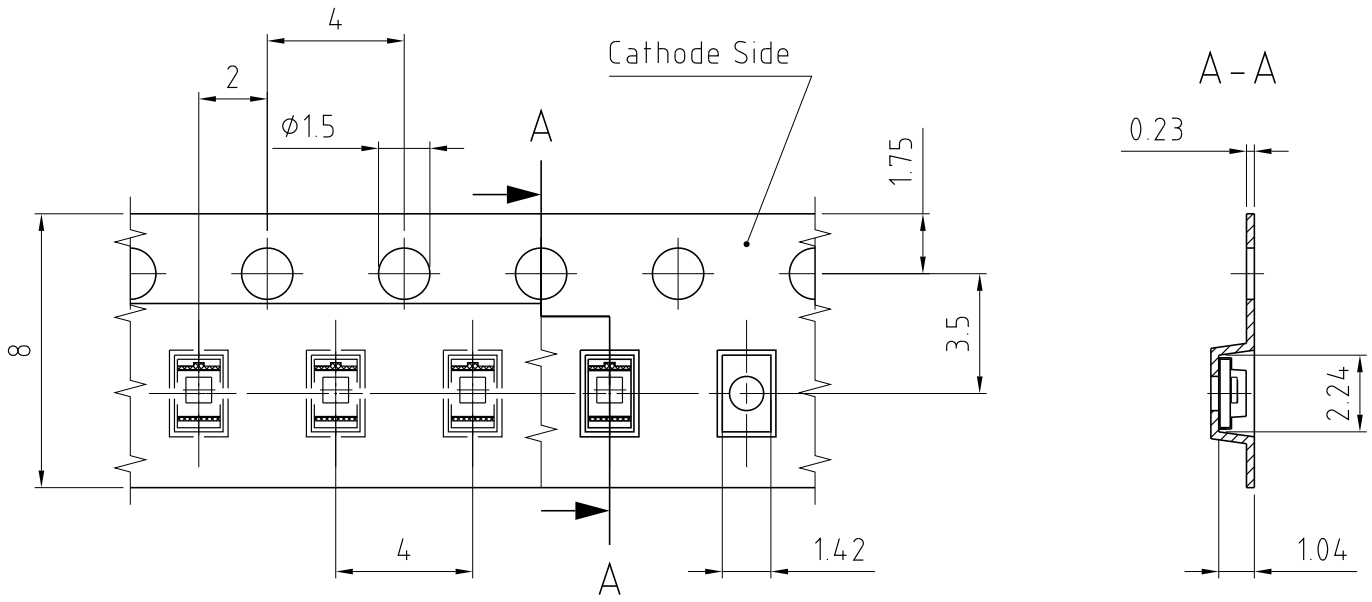


C63062-A4309-B2-01

*Dimensions in mm (inch).*

### Tape and Reel

8 mm tape with 3000 pcs. on ∅ 180 mm reel

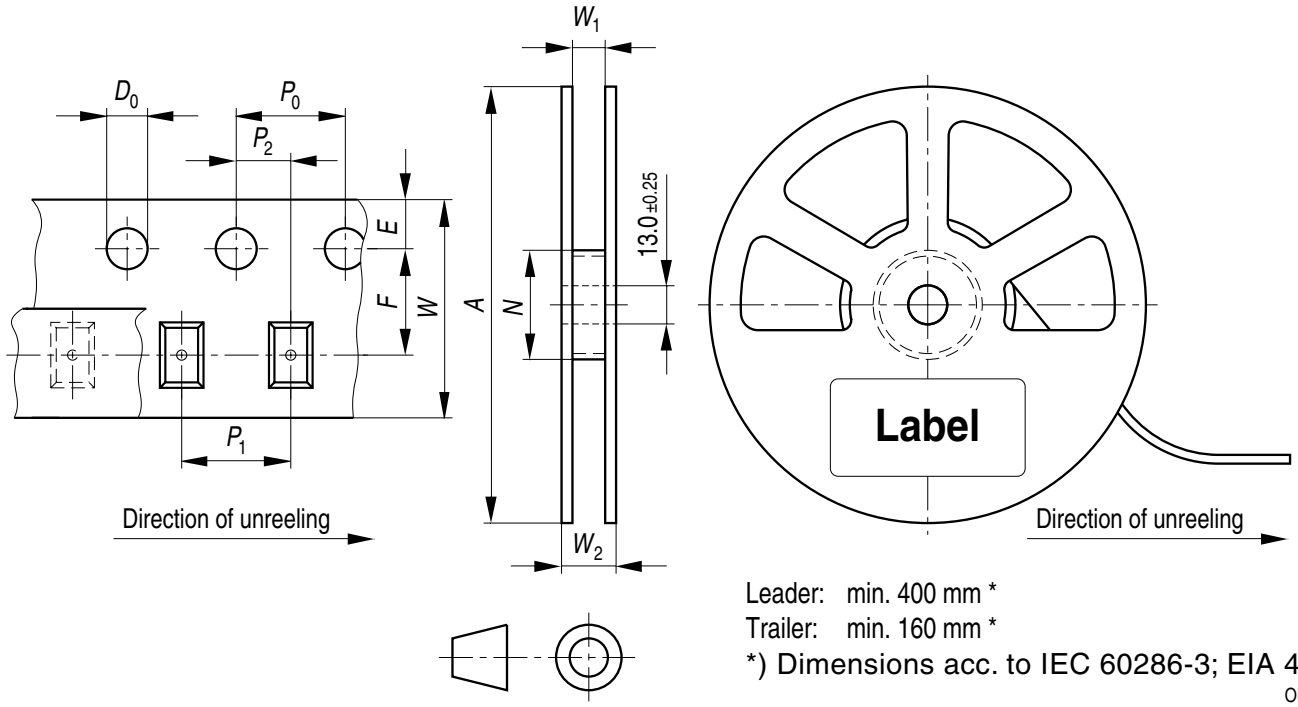


Leader: min. 400 mm *
Trailer: min. 160 mm *
*) Dimensions acc. to IEC 60286-3; EIA 481-D

OHAY0324



OSRAM Opto Semiconductors

### Tape dimensions [mm]

| W | $P_0$ | $P_1$ | $P_2$ | $D_0$ | E | F |
|---|---|---|---|---|---|---|
| 8 + 0.3 / -0.1 | 4 ± 0.1 | 2 ± 0.05<br>or<br>4 ± 0.1 | 2 ± 0.05 | 1.5 ± 0.1 | 1.75 ± 0.1 | 3.5 ± 0.05 |

### Reel dimensions [mm]

| A | W | $N_{min}$ | $W_1$ | $W_{2max}$ |
|---|---|---|---|---|
| 180 | 8 | 60 | 8.4 + 2 | 14.4 |

### Barcode-Product-Label (BPL)

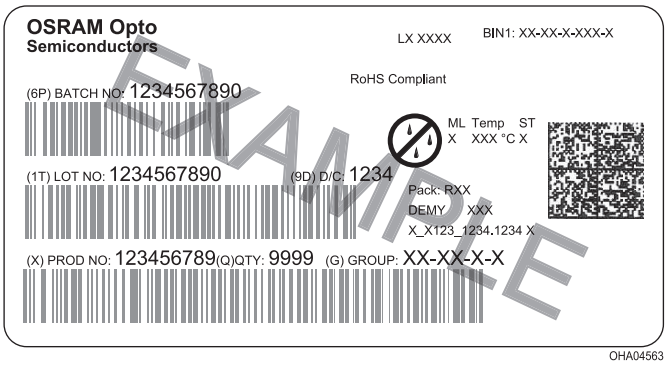


### Dry Packing Process and Materials

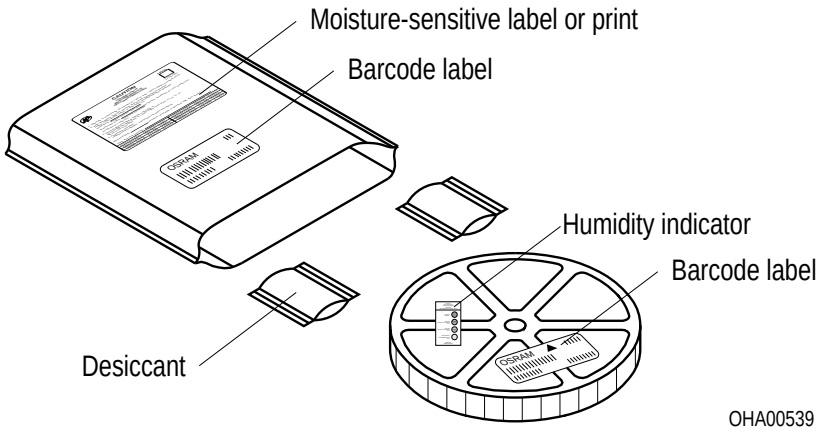


Note:
Moisture-sensitive product is packed in a dry bag containing desiccant and a humidity card.
Regarding dry pack you will find further information in the internet. Here you will also find the normative references like JEDEC.



OSRAM
Opto Semiconductors

### Transportation Packing and Materials

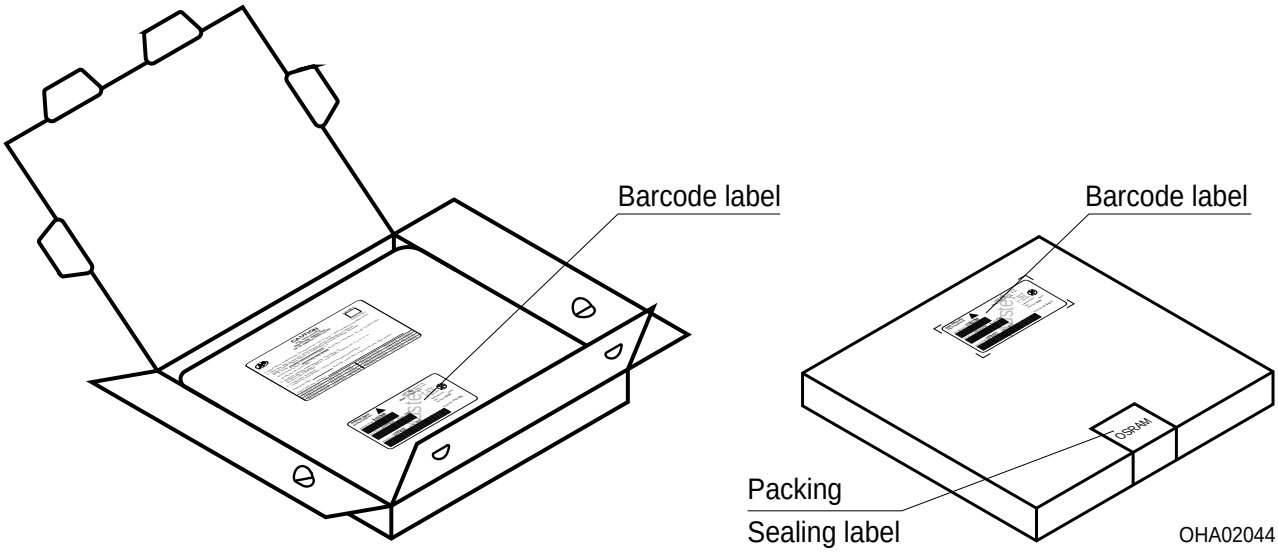


### Dimensions of transportation box in mm

| Width | Length | Height |
|---|---|---|
| 200 ± 5 | 195 ± 5 | 30 ± 5 |

## Disclaimer

Language english will prevail in case of any discrepancies or deviations between the two language wordings.

**Attention please!**
The information describes the type of component and shall not be considered as assured characteristics.
Terms of delivery and rights to change design reserved. Due to technical requirements components may contain dangerous substances.
For information on the types in question please contact our Sales Organization.
If printed or downloaded, please find the latest version in the Internet.
**Packing**
Please use the recycling operators known to you. We can also help you – get in touch with your nearest sales office. By agreement we will take packing material back, if it is sorted. You must bear the costs of transport. For packing material that is returned to us unsorted or which we are not obliged to accept, we shall have to invoice you for any costs incurred.
**Components used in life-support devices or systems must be expressly authorized for such purpose!**
Critical components* may only be used in life-support devices** or systems with the express written approval of OSRAM OS.

*) A critical component is a component used in a life-support device or system whose failure can reasonably be expected to cause the failure of that life-support device or system, or to affect its safety or the effectiveness of that device or system.
**) Life support devices or systems are intended (a) to be implanted in the human body, or (b) to support and/or maintain and sustain human life. If they fail, it is reasonable to assume that the health and the life of the user may be endangered.

## Glossary

[1] **Typical Values:** Due to the special conditions of the manufacturing processes of LED, the typical data or calculated correlations of technical parameters can only reflect statistical figures. These do not necessarily correspond to the actual parameters of each single product, which could differ from the typical data and calculated correlations or the typical characteristic line. If requested, e.g. because of technical improvements, these typ. data will be changed without any further notice.

**Published by OSRAM Opto Semiconductors GmbH**
**Leibnizstraße 4, D-93055 Regensburg**
**www.osram-os.com © All Rights Reserved.**

EU RoHS and China RoHS compliant product

此产品符合欧盟 RoHS 指令的要求；

按照中国的相关法规和标准，不含有毒有害物质或元素。



OSRAM
Opto Semiconductors