Frontier Electronics Corp.

667 E. COCHRAN STREET, SIMI VALLEY, CA 93065
TEL: (805) 522-9998 FAX: (805) 522-9989
E-mail: frontiersales@frontierusa.com
Web: http://www.frontierusa.com

16A DUAL SUPER FAST RECOVERY RECTIFIER

SFF160-03CT THRU SFF160-06CT

CASE : ITO-220AB(SFF160-XX) , FULLY INSULATED PACKAGE

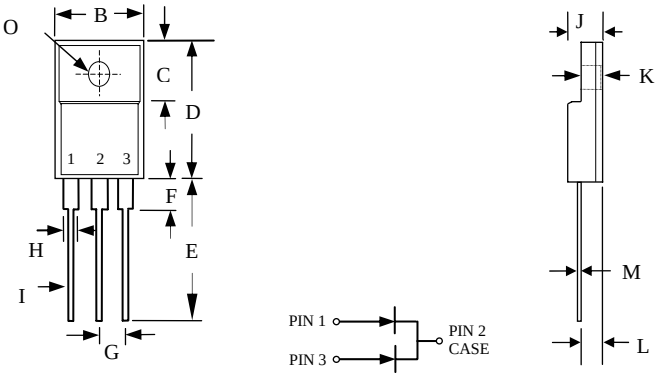

	MILLIMETERS	
	MIN	MAX
B	9.72	10.27
C	6.30	6.90
D	14.50	15.50
E	13.00	13.80
F	-	4.1
G	2.41	2.67
H	-	1.52
I	-	0.9
J	-	4.8
K	-	3.1
L	2.5	2.9
M	-	0.8
O		Ø 3.4

FEATURES

- ULTRA FAST RECOVERY TIME
- LOW FORWARD VOLTAGE
- LOW THERMAL RESISTANCE
- HIGH CURRENT CAPABILITY
- HIGH VOLTAGE
- GLASS PASSIVATED CHIP JUNCTION

MECHANICAL DATA

- CASE: TRANSFER MOLDED
- TERMINAL: MIL-STD-202F METHOD 208
- POLARITY: AS MARKED
- EPOXY: UL94V-0 FLAME RETARDANT MOLDING COMPOUND
- WEIGHT 2.05 GRAMS

MAXIMUM RATINGS AND ELECTRICAL CHARACTERISTICS RATINGS AT 25°C AMBIENT TEMPERATURE UNLESS OTHERWISE SPECIFIED SINGLE PHASE, HALF WAVE, 60 HZ, RESISTIVE OR INDUCTIVE LOAD. FOR CAPACITIVE LOAD, DERATE CURRENT BY 20%.

RATINGS	SYMBOL	SFF160-03CT	SFF160-04CT	SFF160-05CT	SFF160-06CT	UNITS
MAXIMUM RECURRENT PEAK REVERSE VOLTAGE	V_{RRM}	300	400	500	600	V
MAXIMUM RMS VOLTAGE	V_{RMS}	210	280	350	420	V
MAXIMUM DC BLOCKING VOLTAGE	V_{DC}	300	400	500	600	V
MAXIMUM AVERAGE FORWARD RECTIFIED CURRENT SEE FIG.1	I_O	16.0				A
PEAK FORWARD SURGE CURRENT, 8.3ms SINGLE HALF SINE-WAVE SUPERIMPOSED ON RATED LOAD	I_{FSM}	200				A
TYPICAL JUNCTION CAPACITANCE (NOTE 1)	C_J	65				PF
TYPICAL THERMAL RESISTANCE (NOTE 2)	$R_{\theta jc}$	2.2				°C /W
STORAGE TEMPERATURE RANGE	T_{STG}	- 55 TO + 150				°C
OPERATING TEMPERATURE RANGE	T_{OP}	- 55 TO + 150				°C

ELECTRICAL CHARACTERISTICS (A_T T_A =25°C UNLESS OTHERWISE NOTED)

CHARACTERISTICS	SYMBOL	SFF160-03CT	SFF160-04CT	SFF160-05CT	SFF160-06CT	UNITS
MAXIMUM FORWARD VOLTAGE AT 8A PER LEG	V_F	1.30		1.70		V
MAXIMUM DC REVERSE CURRENT AT TA=25°C	I_R	10				µA
MAXIMUM DC REVERSE CURRENT AT TA=100°C	I_R	100				µA
MAXIMUM REVERSE RECOVERY TIME (NOTE 3)	T_{RR}	35				nS

NOTES: 1. MEASURED AT 1 MHZ AND APPLIED REVERSE VOLTAGE 0F 4.0 VOLTS
2. THERMAL RESISTANCE JUNCTION TO CASE PER LEG MOUNTED ON HEAT SINK
3. REVERSE RECOVERY TEST CONDITIONS: I_F=0.5A, I_R=1.0A, I_{RR}=0.25A

RATINGS AND CHARACTERISTIC CURVE SFF160-03CT THRU SFF160-06CT

FIG. 1 -TEST CIRCUIT DIAGRAM AND REVERSE RECOVERY TIME CHARACTERISTIC

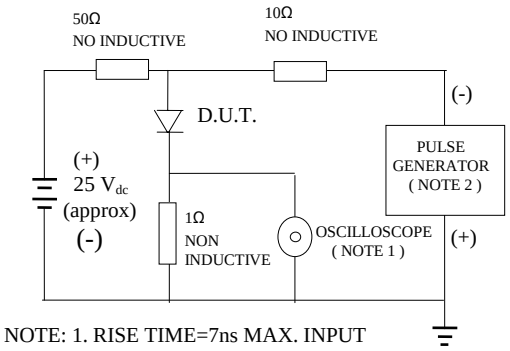

NOTE: 1. RISE TIME=7ns MAX. INPUT IMPEDANCE=1 MOhms 22PF
2. RISE TIME =10 ns MAX. SOURCE IMPEDANCE=50 OHMS

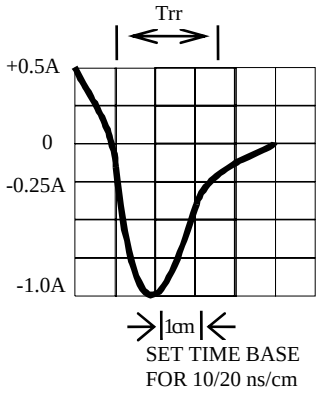

FIG. 2 -TYPICAL FORWARD CURRENT DERATING CURVE

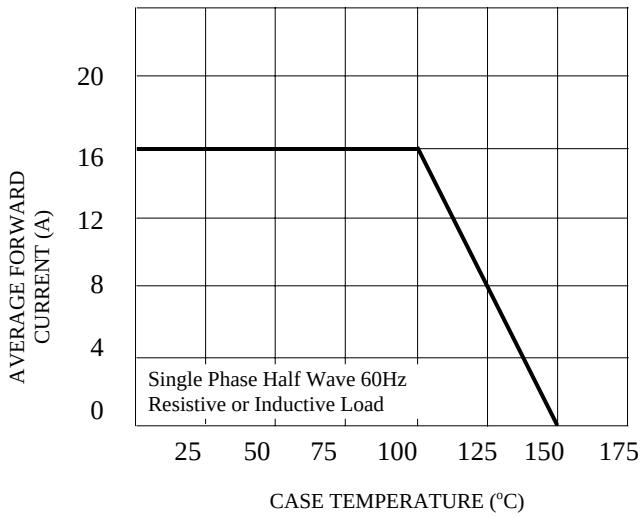

FIG. 3 -TYPICAL INSTANTANEOUS FORWARD CHARACTERISTICS

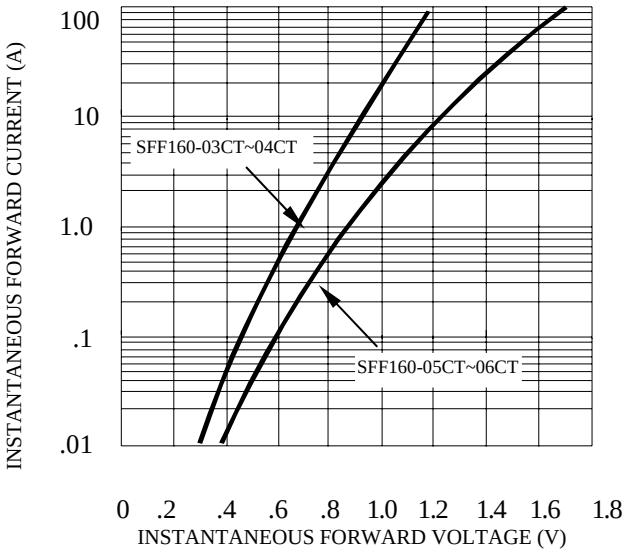

FIG. 4 -TYPICAL REVERSE CHARACTERISTICS

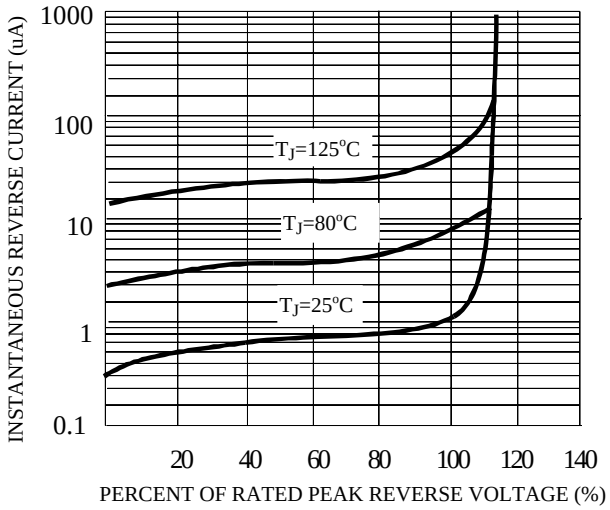

FIG. 5 -TYPICAL JUNCTION CAPACITANCE

