Note: This datasheet may be out of date.
Please download the latest datasheet of SFECK10M7JA00S0-R0 from the official website of Murata Manufacturing Co., Ltd.
http://www.murata.com/en-us/products/productdetail?partno=SFECK10M7JA00S0-R0

SFECK10M7JA00S0-R0

In Production RoHS REACH

Appearance & Shape



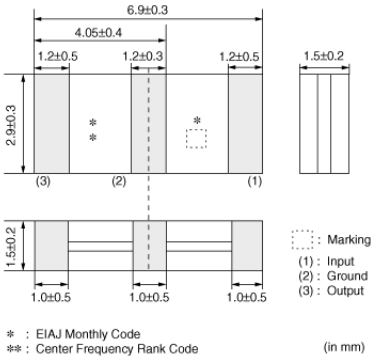

Features

SFECK10M7 series for FM receivers are monolithic type ceramic filters that utilize the thickness expander mode of piezoelectric ceramics. SFECK series enable customers to make an AM/FM set very thin, and it can be useful to the total chip circuit.

Features
1. The piezoelectric element is sandwiched by heat resistant substrate, thus it has excellent mechanical strength, and it is suitable for automatic mounting.
2. Various bandwidths are available. Select a suitable type in accordance with the desired selectivity.
3. Operating Temperature Range: -40 to +85 (degrees C), Storage Temperature Range: -55 to +85 (degrees C)

Applications

Other Usage	Audio Visual Equipment

Packaging Information

Packaging	Specifications	Minimum Order Quantity
-R0	180mm Embossed Tape	2000

Attention
1.This datasheet is downloaded from the website of Murata Manufacturing Co., Ltd. Therefore, it's specifications are subject to change or our products in it may be discontinued without advance notice. Please check with our sales representatives or product engineers before ordering.
2.This datasheet has only typical specifications because there is no space for detailed specifications.
Therefore, please review our product specifications or consult the approval sheet for product specifications before ordering.

Note: This datasheet may be out of date.
Please download the latest datasheet of SFECK10M7JA00S0-R0 from the official website of Murata Manufacturing Co., Ltd.
http://www.murata.com/en-us/products/productdetail?partno=SFECK10M7JA00S0-R0

SFECK10M7JA00S0-R0

Specifications

Operating Temperature Range	-40℃ to 85℃
Shape	SMD
Elements	2
Center Frequency	10.700MHz
Center Frequency Tolerance	±30kHz
Nominal Center Value	No
3dB Bandwidth	150kHz±40kHz
Stop Bandwidth	380kHz
Area of Stop Bandwidth	[within 20dB]
Spurious Attenuation	35dB[within 9MHz to fo]
Insertion Loss	5.5dB±2.0dB(at minimum loss point)
Ripple	1.0dBmax.(at minimum loss point)
Input/Output Impedance	330Ω

Attention
1.This datasheet is downloaded from the website of Murata Manufacturing Co., Ltd. Therefore, it's specifications are subject to change or our products in it may be discontinued without advance notice. Please check with our sales representatives or product engineers before ordering.
2.This datasheet has only typical specifications because there is no space for detailed specifications.
Therefore, please review our product specifications or consult the approval sheet for product specifications before ordering.

Note: This datasheet may be out of date.
Please download the latest datasheet of SFECK10M7JA00S0-R0 from the official website of Murata Manufacturing Co., Ltd.
http://www.murata.com/en-us/products/productdetail?partno=SFECK10M7JA00S0-R0

SFECK10M7JA00S0-R0

Product Data

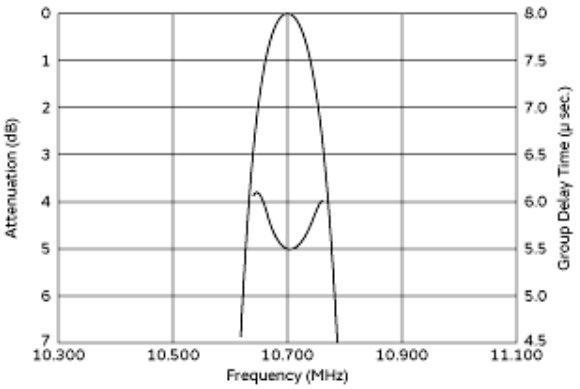

Frequency Characteristics

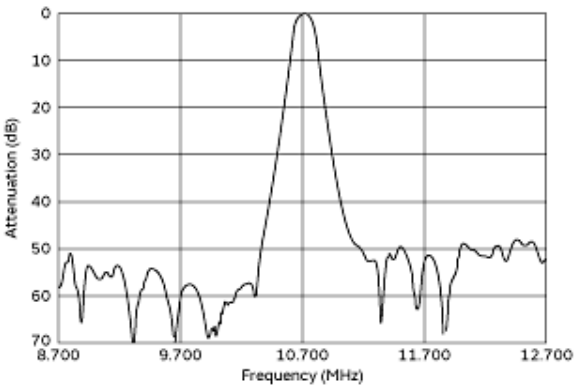

Spurious Response

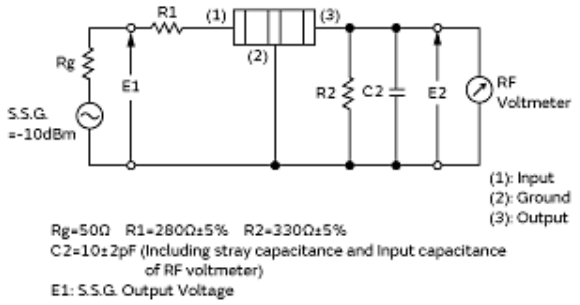

Measurement Circuit

Attention
1.This datasheet is downloaded from the website of Murata Manufacturing Co., Ltd. Therefore, it's specifications are subject to change or our products in it may be discontinued without advance notice. Please check with our sales representatives or product engineers before ordering.
2.This datasheet has only typical specifications because there is no space for detailed specifications.
Therefore, please review our product specifications or consult the approval sheet for product specifications before ordering.