FEATURES

- **Easily Meet EPS Level 6**
- **Less than 75mW Standby Power**
- **Proprietary *super*-QR/PSR™ (Quasi-Resonant & Primary Side Regulation) Control for High Efficiency and Low EMI**
- **±5% CC and CV Precision**
- **Proprietary Cable Drop Compensation**
- **Smart Output Short Protection**
- **Cycle-by-Cycle Current Limiting**
- **Built-in Leading Edge Blanking (LEB)**
- **Pin Floating Protection**
- **Built-in Soft Start**
- **Output Over Voltage Protection**
- **VDD OVP & Clamp**
- **VDD Under Voltage Lockout (UVLO)**

APPLICATIONS

- **Battery chargers for cellular phones, cordless phones, PDA, digital cameras, etc**
- **Replaces linear transformer and RCC SMPS**
- **AC/DC LED lighting**

GENERAL DESCRIPTION

SF6771S is a high performance, highly integrated QR (Quasi Resonant Mode) and Primary Side Regulation (PSR) controller for offline small power converter applications.

SF6771S has proprietary ***super*-QR/PSR™** control for high efficiency and low EMI. The standby power is less than 75mW @230VAC. Thus, the IC can meet EPS Level 6 energy standard easily. The IC also has built-in cable drop compensation function, which can provide excellent CV performance.

SF6771S integrates functions and protections of Under Voltage Lockout (UVLO), VDD Over Voltage Protection (VDD OVP), Soft Start, Cycle-by-cycle Current Limiting (OCP), Pin Floating Protection, Gate Clamping, VDD Clamping.

SF6771S is available in SOT23-6 package.

Sifirst Confidential

TYPICAL APPLICATION

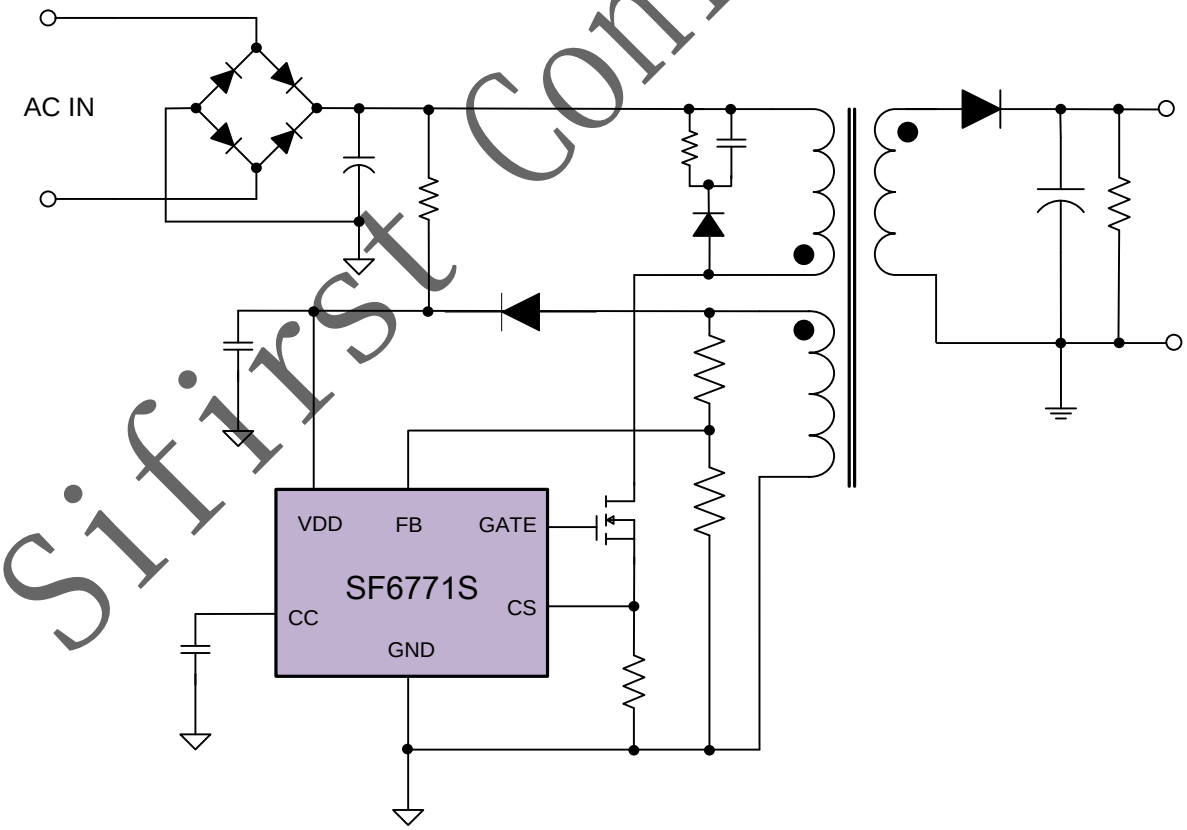

Pin Configuration

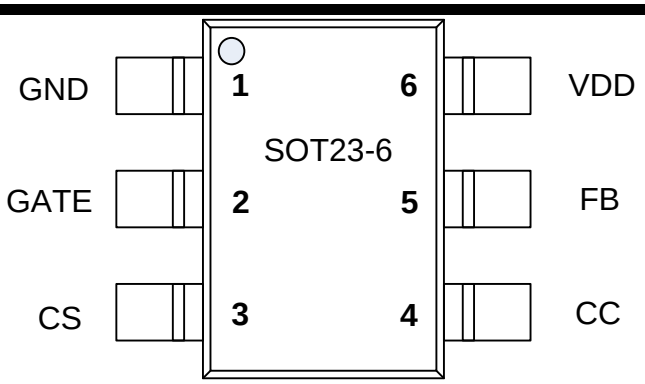

Ordering Information

Part Number	Top Mark	Package		Tape & Reel
SF6771SLGT	.71SYW	SOT23-6	Green	Yes

Marking Information

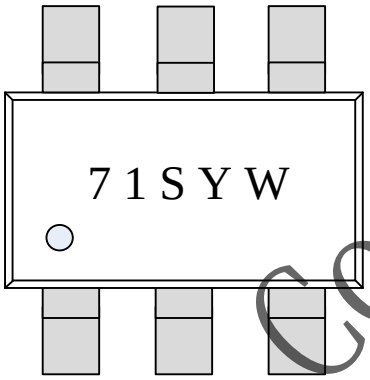

Dot: Pin1 Mark
71S:Part number SF6771S
YW: Year&Week Code

Pin Description

Pin Num	Pin Name	I/O	Description
1	GND	P	Ground
2	GATE	O	Totem-pole gate driver output to drive the external MOSFET.
3	CS	I	Current sense pin.
4	CC	O	Connect a capacitor between this pin and GND for CC regulation.
5	FB	I	System feedback pin. This control input regulates both the output voltage in CV mode and output current in CC mode based on the flyback voltage of the auxiliary winding.
6	VDD	P	IC power supply pin.

SiFirst Confidential