Frontier Electronics Corp.

667 E. COCHRAN STREET, SIMI VALLEY, CA 93065
TEL: (805) 522-9998 FAX: (805) 522-9989
E-mail: frontiersales@frontierusa.com
Web: http://www.frontierusa.com

5A SUPER FAST RECOVERY RECTIFIER

SF50-005 THRU SF50-06

FEATURES

- LOW POWER LOSS, HIGH EFFICIENCY
- LOW FORWARD VOLTAGE
- HIGH CURRENT CAPABILITY
- HIGH SPEED SWITCHING
- HIGH RELIABILITY
- HIGH SURGE CAPABILITY

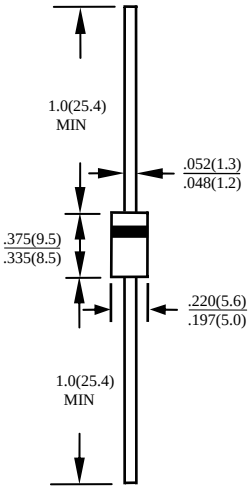

MECHANICAL DATA

- CASE: MOLDED PLASTIC, DO201AD, DIMENSIONS IN INCHES AND (MILLIMETERS)
- EPOXY: UL 94V-0 MOLDING COMPOUND
- LEADS: MIL-STD-202E, METHOD 208C GUARANTEED
- MOUNTING POSITION: ANY
- WEIGHT: 1.2 GRAMS

MAXIMUM RATINGS AND ELECTRICAL CHARACTERISTICS RATINGS AT 25°C AMBIENT TEMPERATURE UNLESS OTHERWISE SPECIFIED SINGLE PHASE, HALF WAVE, 60 HZ, RESISTIVE OR INDUCTIVE LOAD. FOR CAPACITIVE LOAD, DERATE CURRENT BY 20%

RATINGS	SYMBOL	SF50 -005	SF50 -01	SF50 -015	SF50 -02	SF50 -03	SF50 -04	SF50 -05	SF50 -06	UNITS
MAXIMUM RECURRENT PEAK REVERSE VOLTAGE	V_{RRM}	50	100	150	200	300	400	500	600	V
MAXIMUM RMS VOLTAGE	V_{RMS}	35	70	105	140	210	280	350	420	V
MAXIMUM DC BLOCKING VOLTAGE	V_{DC}	50	100	150	200	300	400	500	600	V
MAXIMUM AVERAGE FORWARD RECTIFIED CURRENT 0.375"(9.5mm) LEAD LENGTH AT TA=55°C	I_O	5.0								A
PEAK FORWARD SURGE CURRENT, 8.3ms SINGLE HALF SINE-WAVE SUPERIMPOSED ON RATED LOAD	I_{FSM}	150								A
TYPICAL JUNCTION CAPACITANCE (NOTE 1)	C_J	50				30				PF
TYPICAL THERMAL RESISTANCE (NOTE 2)	$R_{\theta ja}$	30								℃/W
STORAGE TEMPERATURE RANGE	T_{STG}	- 55 TO + 150								℃
OPERATING TEMPERATURE RANGE	T_{OP}	- 55 TO + 150								℃

ELECTRICAL CHARACTERISTICS (A_T T_A =25°C UNLESS OTHERWISE NOTED)

CHARACTERISTICS	SYMBOL	SF50 -005	SF50 -01	SF50 -015	SF50 -02	SF50 -03	SF50 -04	SF50 -05	SF50 -06	UNITS
MAXIMUM FORWARD VOLTAGE AT I_O DC	V_F	0.95				1.25		1.85		V
MAXIMUM REVERSE CURRENT AT 25℃	I_R	10								μA
MAXIMUM REVERSE CURRENT AT 100℃	I_R	100								μA
MAXIMUM REVERSE RECOVERY TIME (NOTE 3)	T_{RR}	35								nS

NOTE: 1. MEASURED AT 1 MHZ AND APPLIED REVERSE VOLTAGE 0F 4.0 VOLTS

2. BOTH LEADS ATTACHED TO HEAT SINK 20×20×1t(mm) COPPER PLATE AT LEAD LENGTH 5mm

3. REVERSE RECOVERY TEST CONDITIONS: I_F=0.5A, I_R=1.0A, I_{RR}=0.25

RATINGS AND CHARACTERISTIC CURVE SF50-005 THRU SF50-06

FIG. 1-TEST CIRCUIT DIAGRAM AND REVERSE RECOVERY TIME CHARACTERISTIC

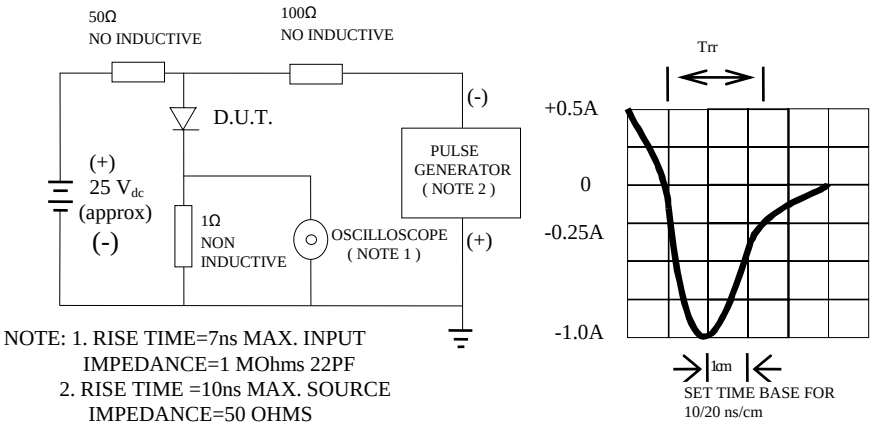

NOTE: 1. RISE TIME=7ns MAX. INPUT IMPEDANCE=1 MOhms 22PF
2. RISE TIME =10ns MAX. SOURCE IMPEDANCE=50 OHMS

FIG. 2-TYPICAL FORWARD CURRENT DERATING CURVE

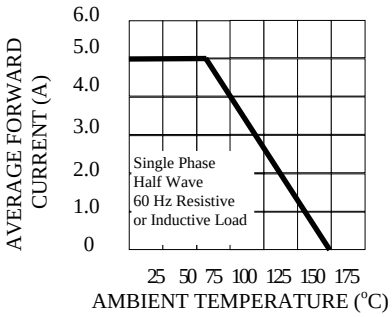

FIG. 3-TYPICAL REVERSE CHARACTERISTICS

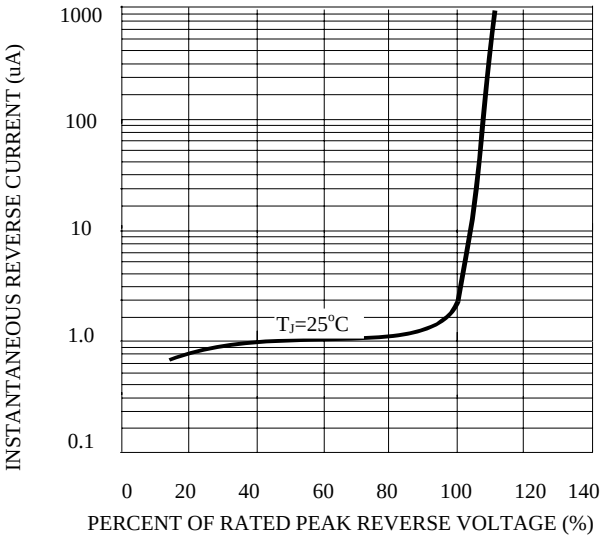

FIG. 4-TYPICAL INSTANTANEOUS FORWARD CHARACTERISTICS

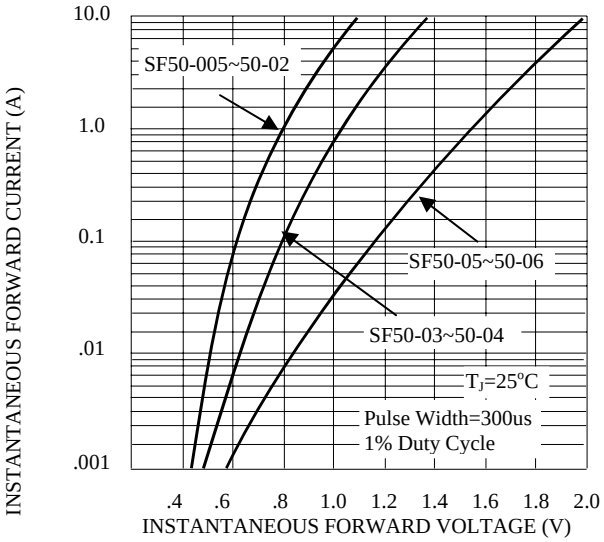

FIG. 5-MAXIMUM NON-REPETITIVE FORWARD SURGE CURRENT

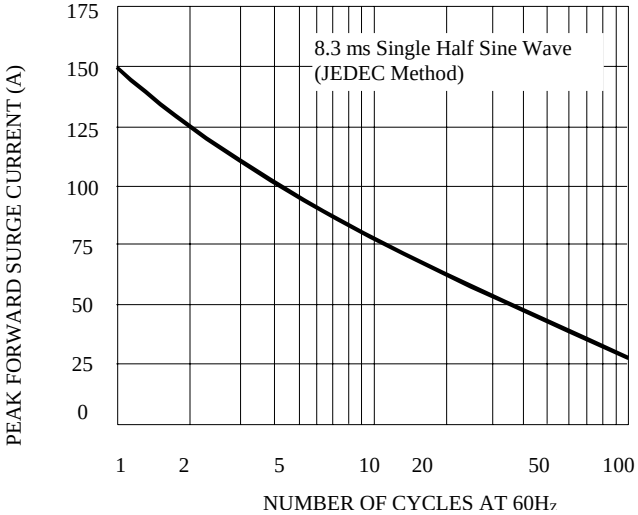

FIG. 6-TYPICAL JUNCTION CAPACITANCE

