Preliminary

SF2149A

46.08 MHz SAW Filter

- ***TD-SCDMA SAW Filter, 46.08 MHz, 5 MHz BW***
- ***Low Insertion Loss***
- ***13.3 x 6.5 x 1.9 mm Surface-mount Case***
- ***Complies with Directive 2002/95/EC (RoHS)***

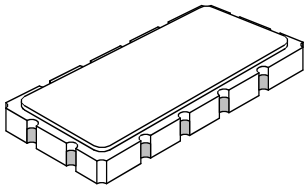

SM13365-12

Absolute Maximum Ratings

Rating	Value	Units
Maximum Incident Power in Passband	+10	dBm
Max. DC voltage between any 2 terminals	30	VDC
Storage Temperature Range	-40 to +85	°C
Suitable for lead-free soldering - Max. Soldering Profile	260°C for 10 s	

Electrical Characteristics

Characteristic		Sym	Notes	Min	Typ	Max	Units
Nominal Center Frequency		f_N	1		46.08		MHz
Passband bandwidth		B_W		5			MHz
Insertion Loss	43.58 ... 48.58 MHz	I_L			8	10	
Relative Attenuation to IL @	30 ... 41.98 MHz			20	25		
out of pass band (Rejection)	61.44 MHz		1, 2,3	40	45		dB
	50.18 ... 76.8 MHz			15	25		
	<30 MHz &>76.8 MHz			40	45		
Amplitude ripple (p-p)	43.58 ... 48.58 MHz				0.6	1.0	dB
Amplitude ripple (p-p) @ 25°C	43.58 ... 48.58 MHz				0.8		dB
Group delay ripple (p-p)	43.58 ... 48.58 MHz				100	120	ns
1 dB compression Point	43.58 ... 48.58 MHz			12	15		dBm
Input IP3				35	40		dBm
Operating Temperature				-40		+85	°C
Terminating impedance					50		Ohm

Case Style	SM13365-12 13.3 x 6.5 mm Nominal Footprint
Lid Symbolization (YY = year, WW = week, S=shift) See note 4	RFM SF2149A // YYWWS

CAUTION: Electrostatic Sensitive Device. Observe precautions for handling.

Notes:

1. Unless noted otherwise, all specifications apply over the operating temperature range with filter soldered to the specified demonstration board with impedance matching to 50 Ω and measured with 50 Ω network analyzer.
2. Unless noted otherwise, all frequency specifications are referenced to the nominal center frequency, fc.
3. Rejection is measured as attenuation below the minimum IL point in the passband. Rejection in final user application is dependent on PCB layout and external impedance matching design. See Application Note No. 42 for details.
4. Part to part absolute delay measurement records the absolute delay mean across 1 dB passband.
5. "LRIP" or "L" after the part number indicates "low rate initial production" and "ENG" or "E" indicates "engineering prototypes."
6. The design, manufacturing process, and specifications of this filter are subject to change.
7. Either Port 1 or Port 2 may be used for either input or output in the design. However, impedances and impedance matching may vary between Port 1 and Port 2, so that the filter must always be installed in one direction per the circuit design.
8. US and international patents may apply.

©2008 by RF Monolithics, Inc.

SM13365-12 Case

12-Terminal Ceramic Surface-Mount Case

13.3 x 6.5 mm Nominal Footprint

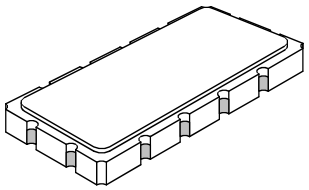

Case Dimensions						
Dimension	mm			Inches		
	Min	Nom	Max	Min	Nom	Max
A	13.08	13.31	13.60	0.515	0.524	0.535
B	6.27	6.50	6.80	0.247	0.256	0.268
C		1.91	2.00		0.075	0.079
D		1.50			0.059	
E		0.79			0.031	
H		1.0			0.039	
P		2.54			0.100	

Materials	
Solder Pad Termination	Au plating 30 - 60 uInches (76.2-152 uM) over 80-200 uInches (203-508 uM) Ni.
Lid	Fe-Ni-Co Alloy Electroless Nickel Plate (8-11% Phosphorus) 100-200 uInches Thick
Body	Al_2O_3 Ceramic
Pb Free	

Electrical Connections		
Connection		Terminals
Port 1	Input or Return	2
	Return or Input	3
Port 2	Output or Return	8
	Return or Output	9
	Ground	All others
Single Ended Operation		**Return is ground**
Differential Operation		**Return is hot**

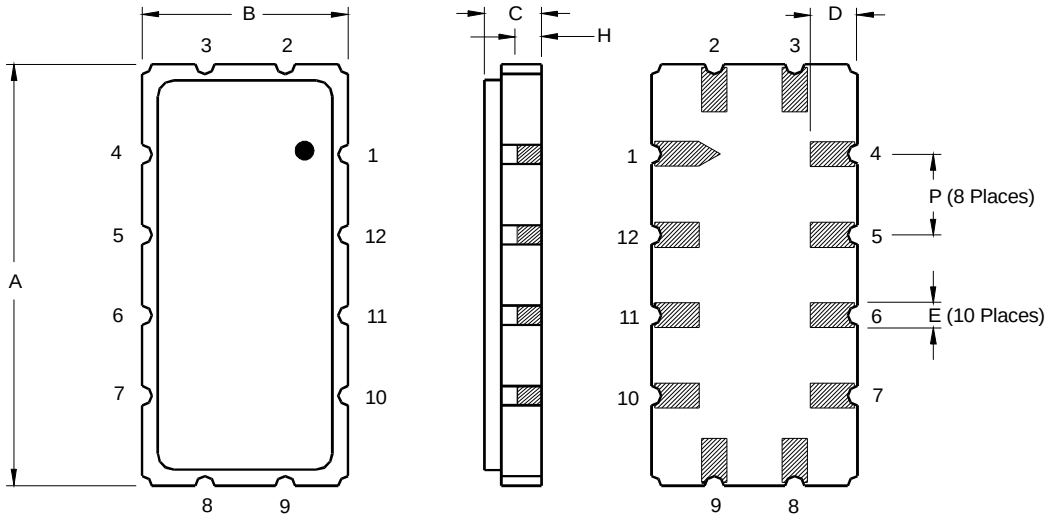

TOP VIEW

BOTTOM VIEW

©2008 by RF Monolithics, Inc.

Testing Environment

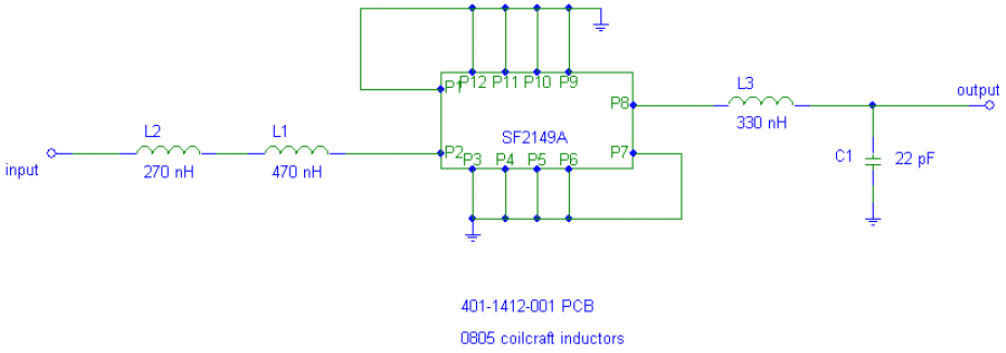

401-1412-001 PCB

0805 coilcraft inductors

Frequency Response

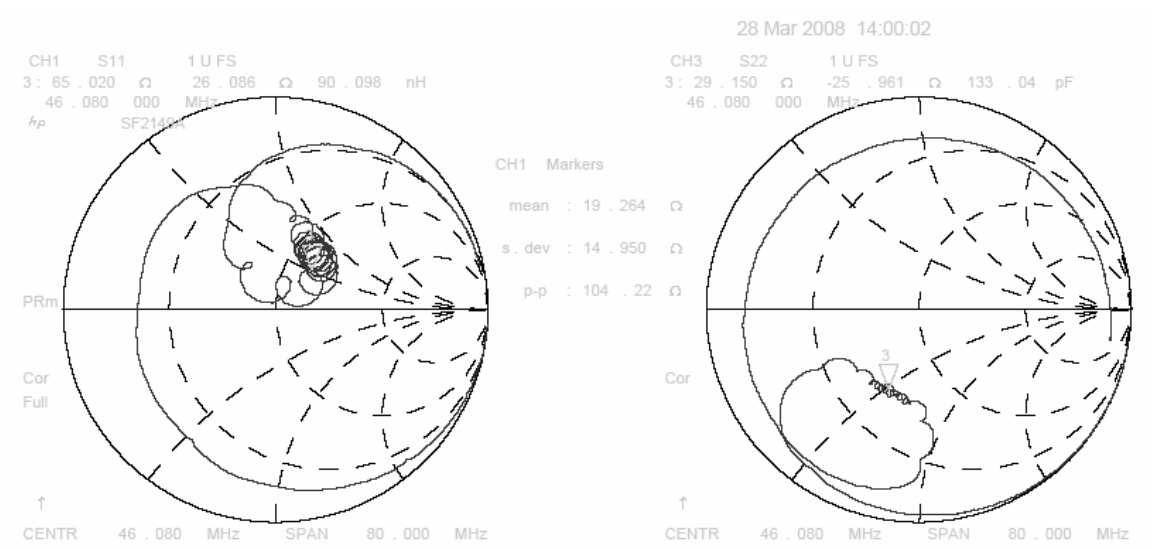

©2008 by RF Monolithics, Inc.

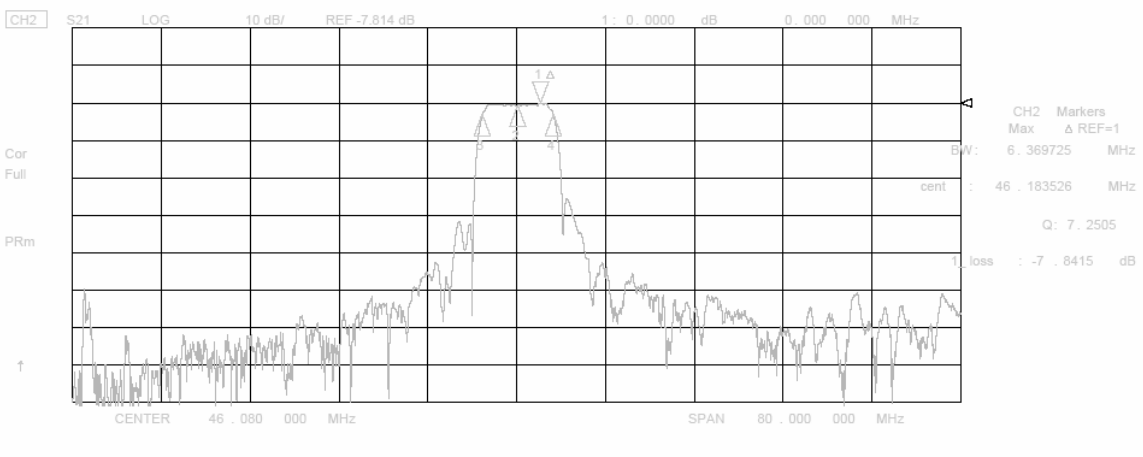

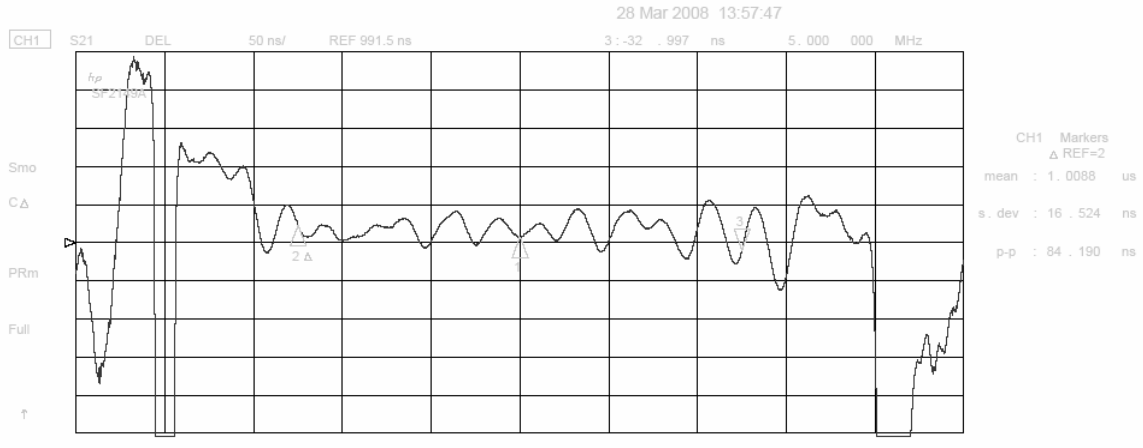

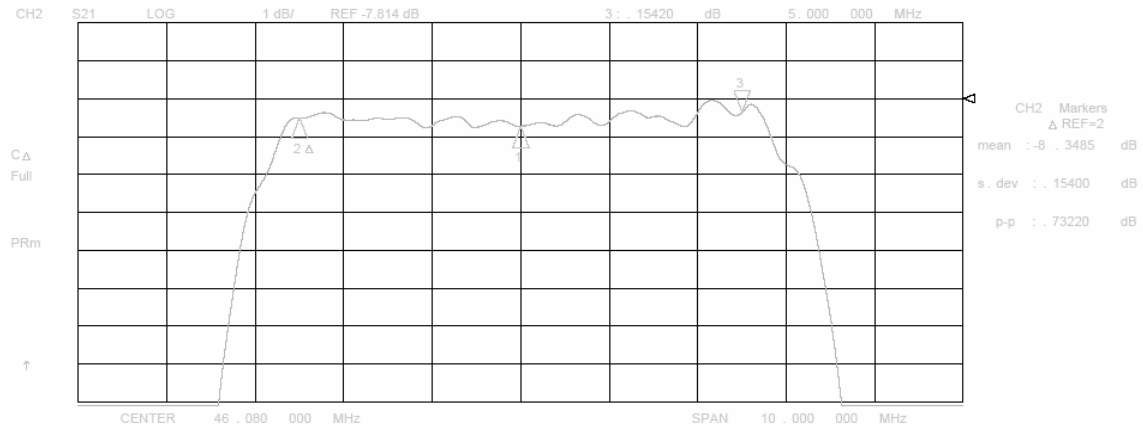

©2008 by RF Monolithics, Inc.