200V, 20A ULTRAFAST DUAL RECTIFIERS

Features

- Low forward voltage drop and leakage current
- Ultrafast reverse recovery time (trr<30ns)
- Low power loss and high efficiency
- Dual common cathode rectifier construction
- Full lead (Pb)-free and RoHS compliant device

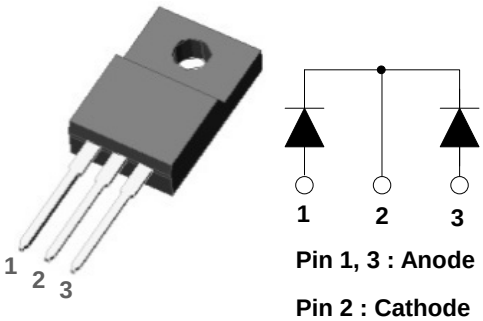

TO-220F-3L

Applications

- Switching power supply
- Power inverters
- Free-wheeling diode
- Power conversion system
- Motor drives

Product Characteristics

$I_{F(AV)}$	2 X 10A
V_{RRM}	200V
V_{FM} at 125℃	0.88V
t_{rr}	30ns

Description

The SF20A200HPI is an ultrafast rectifier. It has a low forward voltage drop and reverse recovery time (trr<30ns). The device is intended for use as a free wheeling, clamping rectifier in a variety of switching power supplies and other power switching applications.

Ordering Information

Device	Marking Code	Package	Packaging
SF20A200HPI	SF20A200H	TO-220F-3L	Tube

Marking Information

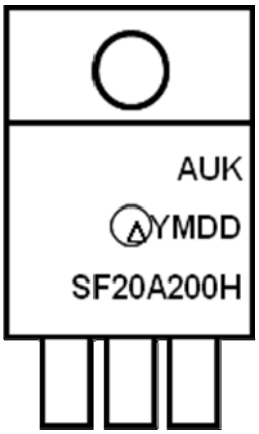

AUK = Manufacture Logo

Δ = Control Code of Manufacture

YMDD = Date Code Marking

-. Y = Year Code

-. M = Monthly Code

-. DD = Daily Code

SF20A200H = Specific Device Code

Absolute Maximum Ratings (Limiting Values)

Characteristic		Symbol	Value	Unit
Maximum repetitive reverse voltage Maximum working peak reverse voltage Maximum DC blocking voltage		V_{RRM} V_{RWM} V_R	200	V
Maximum average forward rectified current	per diode	$I_{F(AV)}$	10	A
	total device		20	
Peak forward surge current 8.3ms single half sine-wave superimposed on rated load per diode		I_{FSM}	120	A
Storage temperature range		T_{stg}	-45 to +150	℃
Maximum operating junction temperature		T_j	150	℃

Thermal Characteristics

Characteristic		Symbol	Value	Unit
Maximum thermal resistance junction to case	per diode	$R_{th(j-c)}$	4.0	℃/W
	total device		3.6	

Electrical Characteristics (Per Diode)

Characteristic	Symbol	Test Condition		Min.	Typ.	Max.	Unit
Peak forward voltage drop	V_{FM} (1)	I_{FM} = 10A	T_j=25℃	-	-	0.98	V
			T_j=125℃	-	-	0.88	V
Reverse leakage current	I_{RM} (1)	$V_R = V_{RRM}$	T_j=25℃	-	-	25	uA
			T_j=125℃	-	-	500	uA
Reverse recovery time	t_{rr}	I_F = 1A, di/dt =-100 A/us		-	-	30	ns
Junction capacitance	C_j	$V_R = 4V_{DC}$, f=1MHz		-	150	-	pF

Note : (1) Pulse test : $t_P \leq 380\ \mu s$, Duty cycle $\leq 2\%$

Rating and Characteristic Curves (Per Diode)

Fig. 1 V_F - I_F

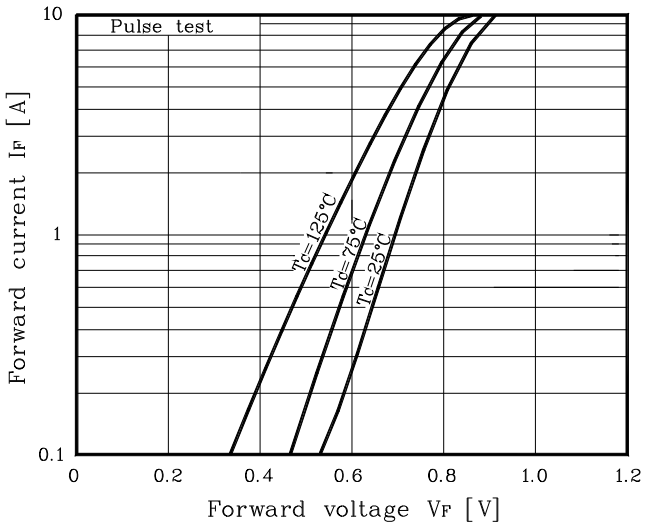

Fig. 2 I_R - V_R

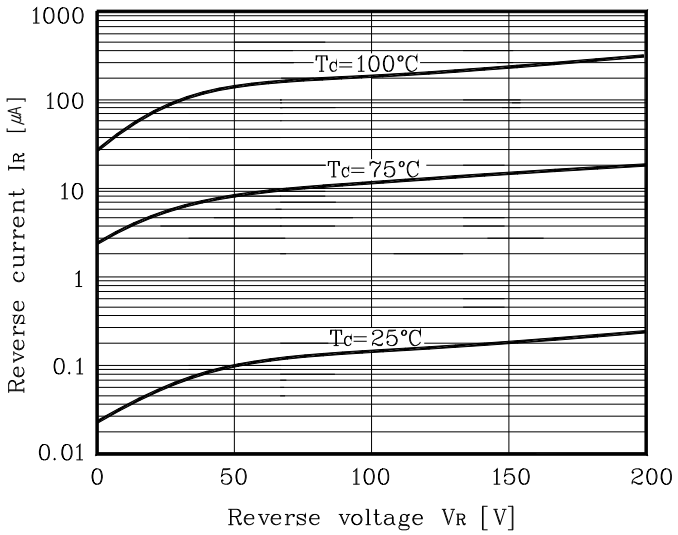

Fig. 3 I_O – P_F

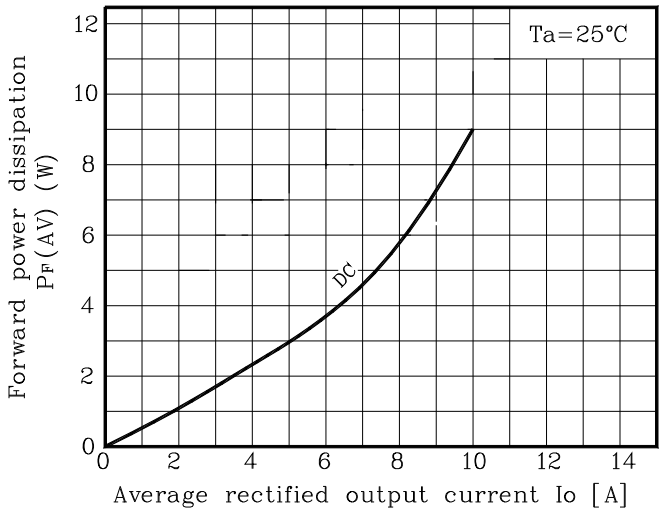

Fig. 4 C_T - V_R

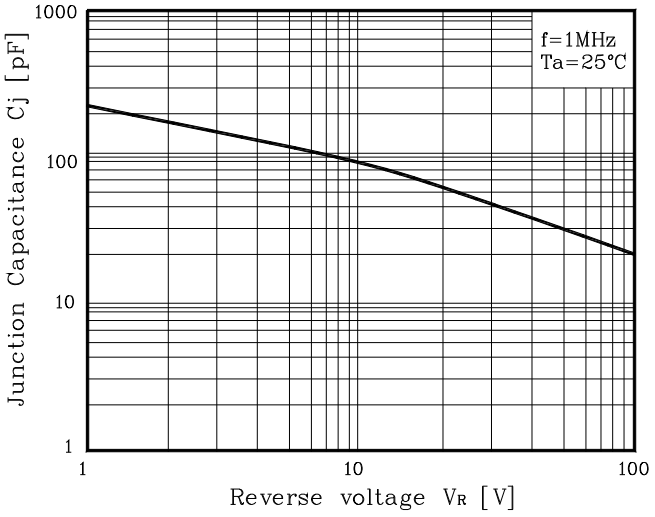

Fig. 5 I_{FSM} – Number of cycle

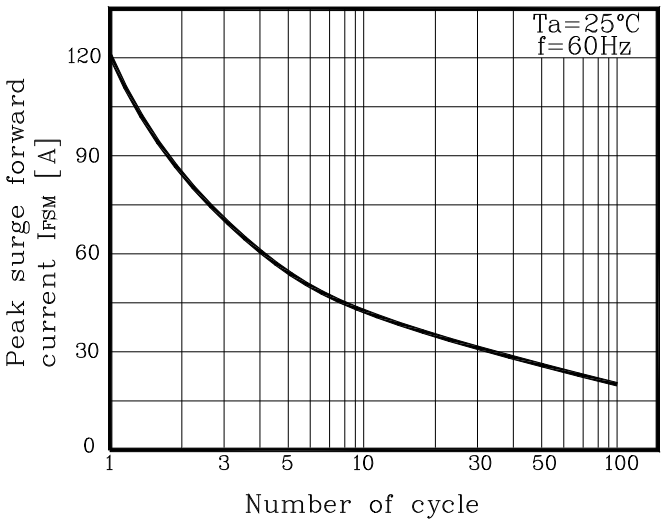

Fig. 6 I_O derating - T_C

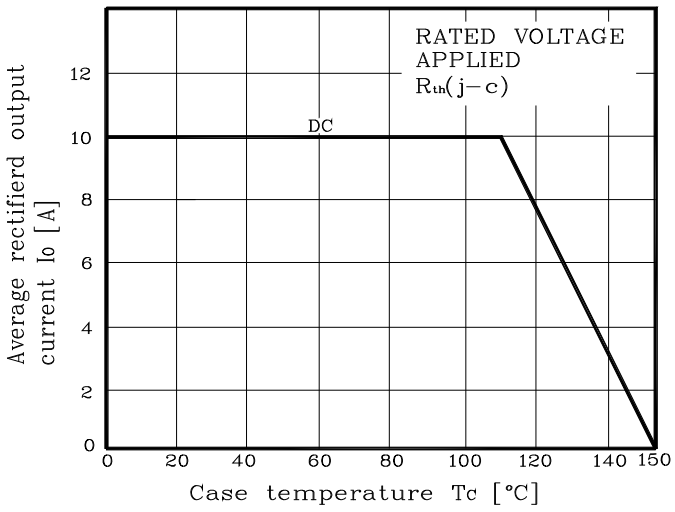

Package Outline Dimension

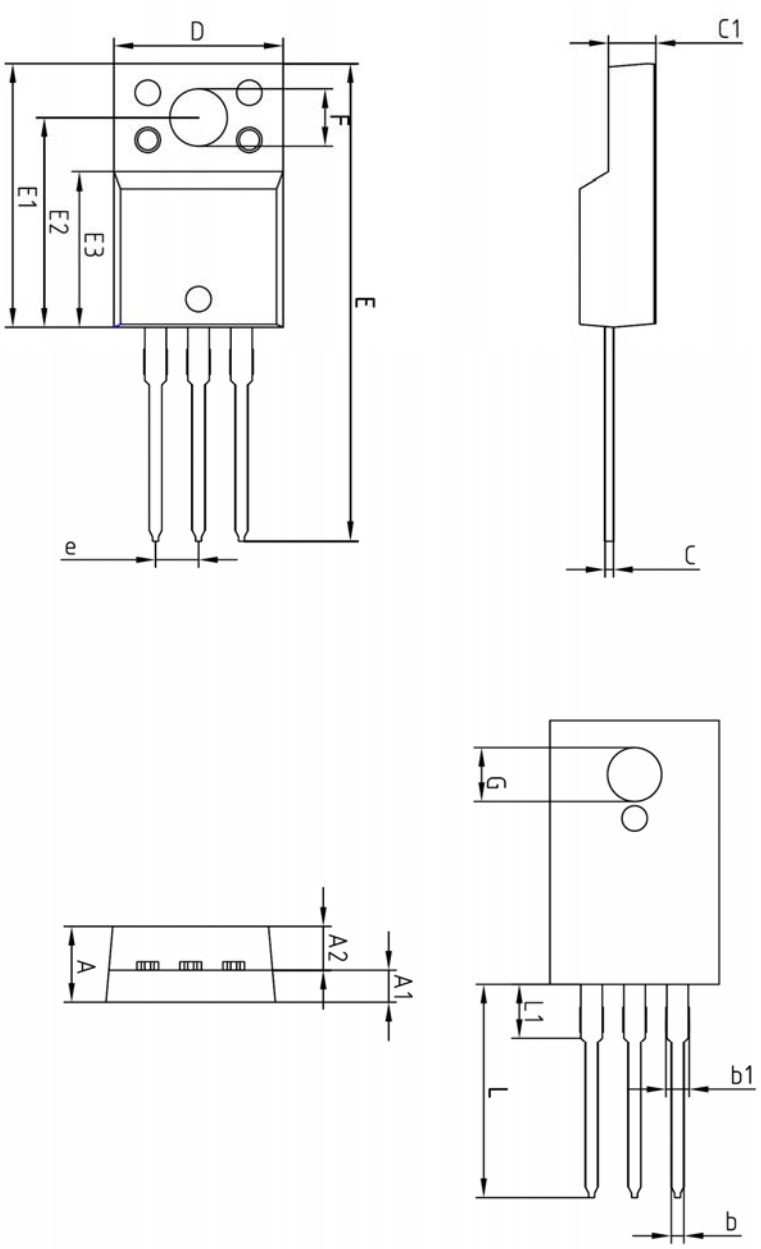

SYMBOL	MILLIMETERS			NOTE
	MINIMUM	NOMINAL	MAXIMUM	
A	–	–	4.60	
A1	2.45	2.50	2.55	
A2	1.95	2.00	2.05	
b	0.65	0.75	0.85	
b1	1.07	1.27	1.47	
C	0.40	0.50	0.60	
C1	2.70	2.80	2.90	
D	9.90	10.00	10.10	
E	28.00	–	28.60	
E1	15.50	15.60	15.70	
E2	12.30	12.40	12.50	
E3	9.15	9.20	9.25	
F	3.30	3.40	3.50	
G	3.10	3.20	3.30	
e	2.54 BSC			
L	12.40	–	13.00	
L1	3.46 BSC			

The AUK Corp. products are intended for the use as components in general electronic equipment (Office and communication equipment, measuring equipment, home appliance, etc.).

Please make sure that you consult with us before you use these AUK Corp. products in equipments which require high quality and / or reliability, and in equipments which could have major impact to the welfare of human life(atomic energy control, airplane, spaceship, transportation, combustion control, all types of safety device, etc.). AUK Corp. cannot accept liability to any damage which may occur in case these AUK Corp. products were used in the mentioned equipments without prior consultation with AUK Corp..

Specifications mentioned in this publication are subject to change without notice.