SF161CTA THRU SF168CTA

GLASS PASSIVATED SUPER FAST RECTIFIER
Reverse Voltage – 50 to 800 V
Forward Current – 16 A

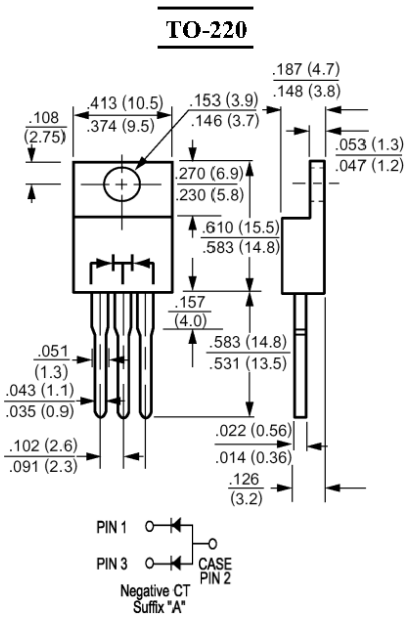

Dimensions in inches and (millimeters)

Features

- Low forward voltage drop
- Low reverse leakage current
- Superfast switching time for high efficiency
- High current capability
- High surge current capability

Mechanical Data

- Case: Molded plastic, TO-220
- Epoxy: UL 94V-0 rate flame retardant
- Terminals: leads solderable per MIL-STD-202 method 208 guaranteed
- Polarity: As marked
- Mounting Position: Any

Absolute Maximum Ratings and Characteristics

Ratings at 25 °C ambient temperature unless otherwise specified. Single phase, half wave, 60 Hz, resistive or inductive load. For capacitive load, derate current by 20%.

Parameter	Symbols	SF161CTA	SF162CTA	SF163CTA	SF164CTA	SF165CTA	SF166CTA	SF167CTA	SF168CTA	Units
Maximum Recurrent Peak Reverse Voltage	V_{RRM}	50	100	150	200	300	400	500	600	V
Maximum RMS Voltage	V_{RMS}	35	70	105	140	210	280	350	420	V
Maximum DC Blocking Voltage	V_{DC}	50	100	150	200	300	400	500	600	V
Maximum Average Forward Rectified Current at T_C = 100 °C	$I_{(AV)}$	16								A
Peak Forward Surge Current, 8.3 mS Single half Sine-wave Superimposed on Rated Load (JEDEC method)	I_{FSM}	125								A
Maximum Forward Voltage at 8 A and 25 °C	V_F	0.95				1.3		1.7		V
Maximum Reverse Current at T_A = 25 °C at Rated DC Blocking Voltage T_A = 100 °C	I_R	10 500								μA
Typical Junction Capacitance [1]	C_J	80				60				pF
Maximum Reverse Recovery Time [2]	t_{rr}	35				50				ns
Typical Thermal Resistance [3]	$R_{\theta JC}$	2.5								°C/W
Operating and Storage Temperature Range	T_J, T_s	-55 to +150								°C

[1] Measured at 1 MHz and applied reverse voltage of 4 VDC.
[2] Reverse recovery test conditions: I_F = 0.5 A, I_R = 1 A, I_{RR} = 0.25 A
[3] Thermal resistance from Junction to case per leg mounted on heatsink.

SEMTECH ELECTRONICS LTD.
(Subsidiary of Semtech International Holdings Limited, a company listed on the Hong Kong Stock Exchange, Stock Code: 724)

ISO/TS 16949 : 2002 Certificate No. 05103
ISO 14001:2004 Certificate No. 7116
ISO 9001:2000 Certificate No. 0506098

Dated : 24/03/2006 H

FIG.1- REVERSE RECOVERY TIME CHARACTERISTIC AND TEST CIRCUIT DIAGRAM

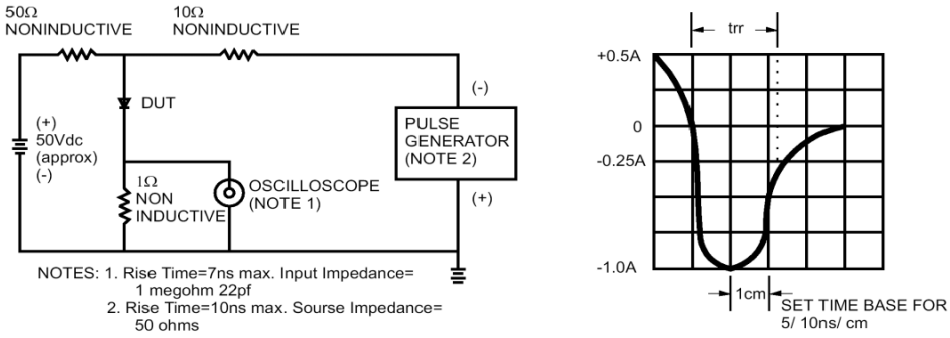

FIG.2- MAXIMUM FORWARD CURRENT DERATING CURVE

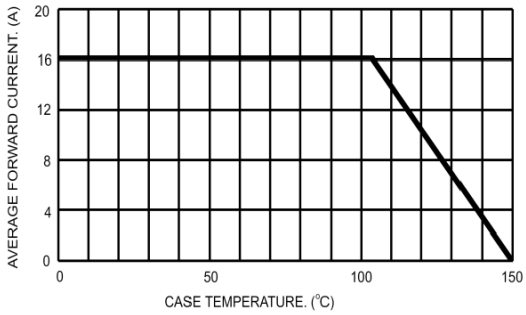

FIG.3- TYPICAL REVERSE CHARACTERISTICS

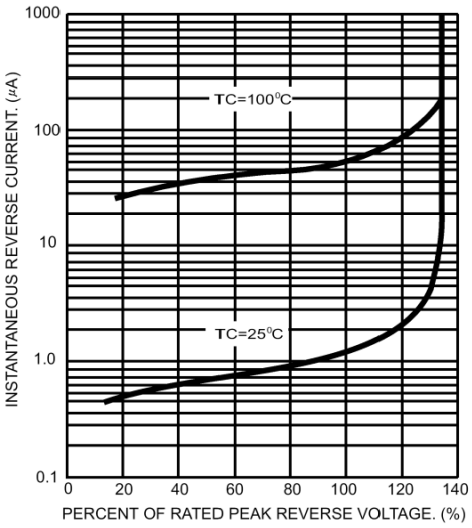

FIG.4- MAXIMUM NON-REPETITIVE FORWARD SURGE CURRENT PER LEG

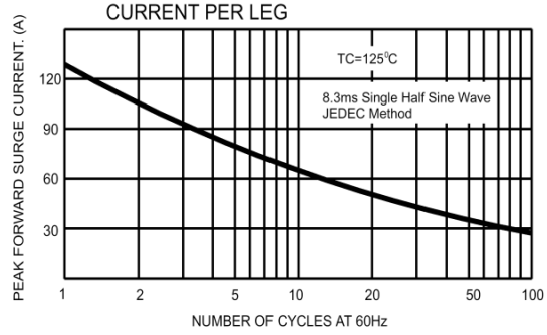

FIG.5- TYPICAL JUNCTION CAPACITANCE PER LEG

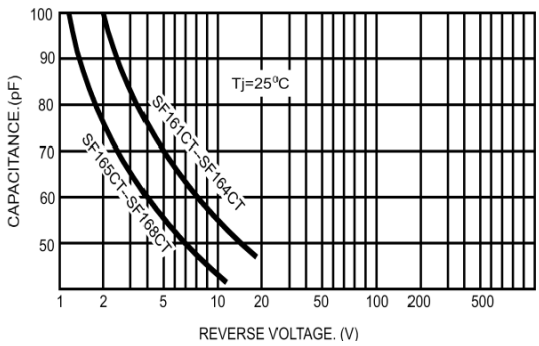

FIG.6- TYPICAL FORWARD CHARACTERISTICS PER LEG

