ROHS COMPLIANT

PRODUCT DATA DRAWING

REVISION HISTORY			
REV	DESCRIPTION	DATE	APPROVED
-	NRN 44458	12/19	BNK

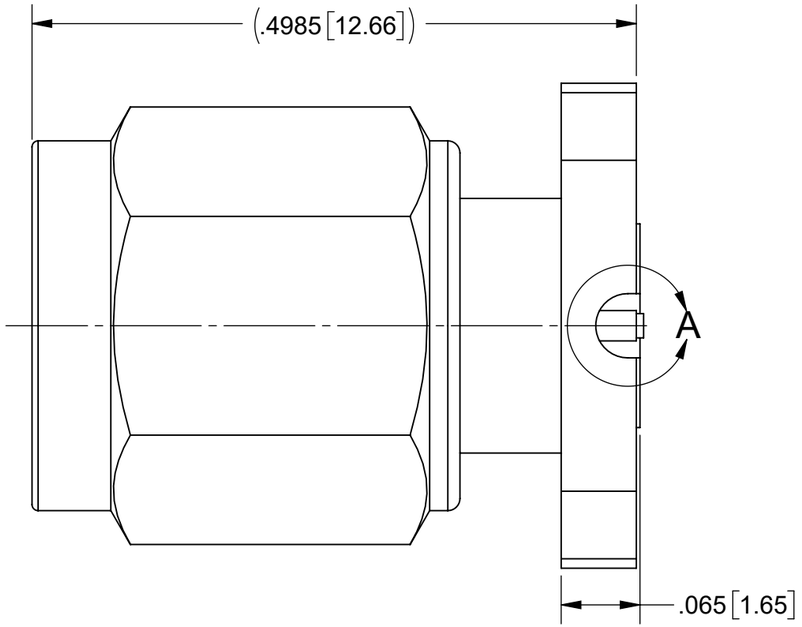

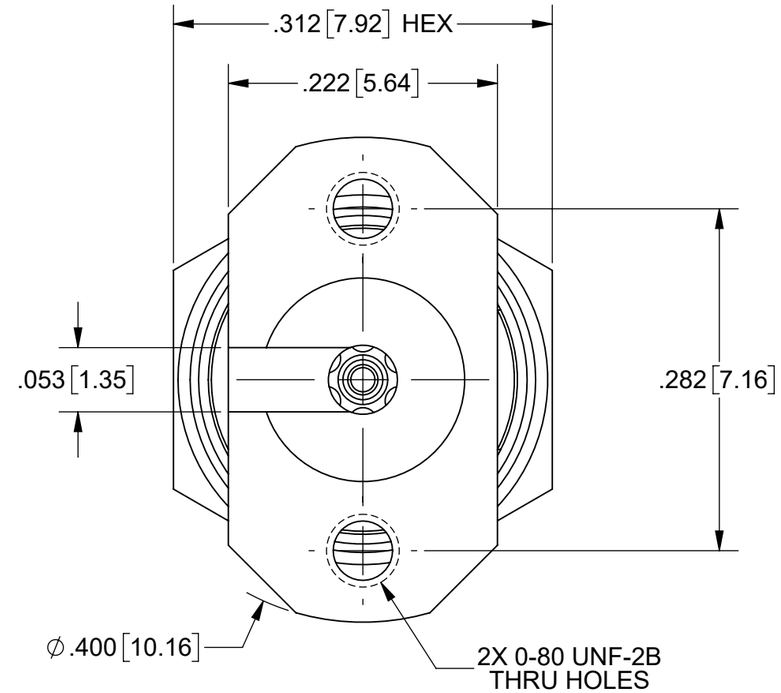

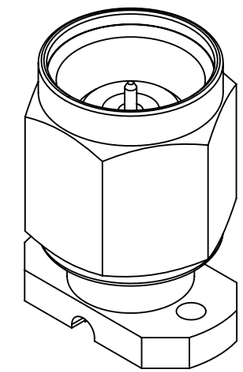

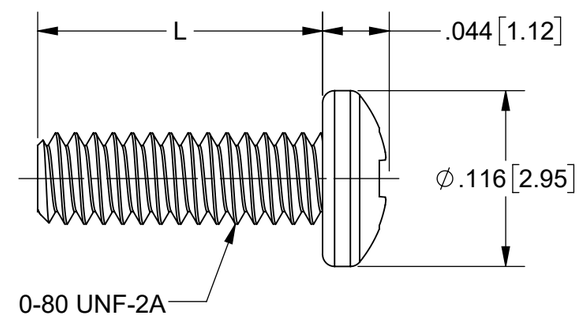

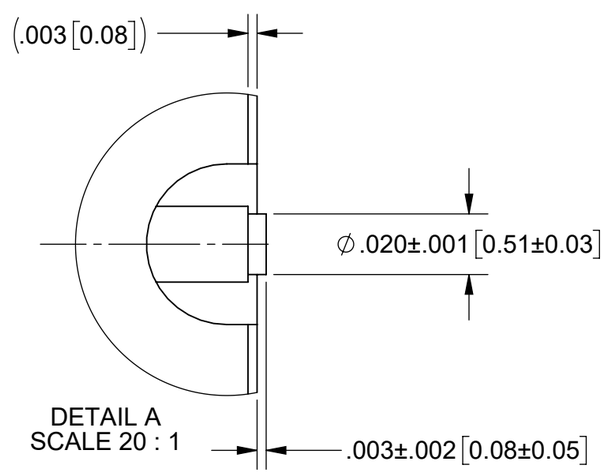

MATERIAL:

BODY, INSERT & COUPLING NUT: STAINLESS STEEL PER AMS-5640, ALLOY UNS S30300, TYPE 1; OR ASTM A582 TYPE 303, COND. A

LOCK RING & CONTACT: BERYLLIUM COPPER PER ASTM B196, ALLOY No. UNS C17300, TD04

BEAD: ULTEM 1000 PER ASTM D5205

GASKET: SILICONE RUBBER PER A-A-59588, CLASS 2B, GRADE 60/70

FINISH:

BODY, INSERT & COUPLING NUT: PASSIVATED PER AMS-2700

CONTACT: GOLD PER ASTM B488, TYPE II, CODE C, CLASS 1.27, OVER NICKEL PER AMS-QQ-N-290, CLASS 1, .00005" MIN.

PERFORMANCE:

IMPEDANCE: 50 OHMS
FREQ. RANGE: DC TO 50.0 GHz

SV P/N	DESCRIPTION	PCB THICKNESS	L
SF1611-60021	NO SCREWS	.005 TO .373	N/A
SF1611-60021-1S	INCL. TWO .188 SCREWS	.032 TO .123	.188
SF1611-60021-2S	INCL. TWO .250 SCREWS	.094 TO .185	.250
SF1611-60021-3S	INCL. TWO .438 SCREWS	.282 TO .373	.438

MATERIAL: SEE NOTES
FINISH: SEE NOTES
SURFACE AREA: N/A

PROPRIETARY

THE INFORMATION CONTAINED IN THIS DRAWING IS THE SOLE PROPERTY OF SV MICROWAVE, INC. ANY REPRODUCTION IN PART OR AS A WHOLE WITHOUT THE WRITTEN PERMISSION OF SV MICROWAVE, INC IS PROHIBITED.

DIMENSIONS ARE IN INCHES TOLERANCES:
FRACTIONAL: ±1/64 ANGULAR: X° ±1°0' X°X' ±15'
DECIMAL: .X ±.030 .XX ±.010 .XXX ±.005

INTERPRET DIMENSIONS AND TOLERANCES PER ASME Y14.5M - 1994

THIRD ANGLE PROJECTION

UNLESS OTHERWISE SPECIFIED
1) ALL DIMENSIONS ARE IN INCHES [MILLIMETERS]
2) ALL DIMENSIONS ARE AFTER PLATING.
3) BREAK CORNERS & EDGES .005 R. MAX.
4) CHAM. 1ST & LAST THREADS.
5) SURFACE ROUGHNESS 63 MIL-STD-10.
6) DIA. 'S ON COMMON CENTERS TO BE CONCENTRIC WITHIN .005 T.I.R.
7) REMOVE ALL BURRS

DRAWN: JDT 12/10/19
CHECKED: BNK 12/10/19
APPROVED: BNK 12/10/19

Amphenol SV MICROWAVE
www.svmicrowave.com

TITLE: 2.4mm MALE 2 HOLE FLANGE COMPRESSION MOUNT

SIZE B | DWG. NO. SF1611-60021-XS

SCALE: 8:1 | SHEET 1 OF 1