SF1601CT THRU SF1608CT

Super Fast Recovery Rectifiers

Reverse Voltage - 50 to 600 Volts
Forward Current - 16.0 Amperes

Features

- Fast switching for high efficiency
- Low cost
- Low reverse leakage current
- High current capability
- Low forward voltage drop
- Meet UL flammability classification 94V-0

Mechanical Data

- Case: TO-220AB Molded plastic
- Polarity: Polarity: As marked on the body
- Mounting position: Any

Note: Products with logo HY or hy are made by HY Electronic (Cayman) Limited.

Applications

- For use in SMPS, high frequency inverters, PWM and polarity protection applications

TO-220AB

RoHS COMPLIANT

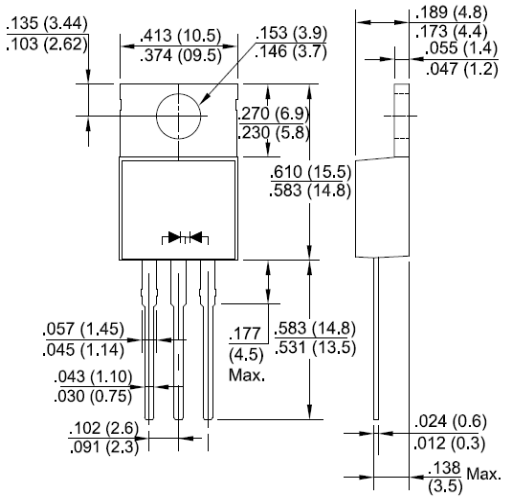

Package Outline Dimensions in Inches (Millimeters)

Maximum Ratings and Electrical Characteristics

Rating at 25℃ ambient temperature unless otherwise specified.
Single phase, half wave, 60Hz, resistive or inductive load.
For capacitive load, derate current by 20%.

Characteristics	Symbol	SF 1601CT	SF 1602CT	SF 1603CT	SF 1604CT	SF 1605CT	SF 1606CT	SF 1608CT	Unit
Maximum Repetitive Peak Reverse Voltage	V_{RRM}	50	100	150	200	300	400	600	V
Maximum RMS Voltage	V_{RMS}	35	70	105	140	210	280	420	V
Maximum DC Blocking Voltage	V_{DC}	50	100	150	200	300	400	600	V
Maximum Average Forward Rectified Current @ T_A=75℃	$I_{(AV)}$	16.0							A
Peak Forward Surge Current, 8.3mS Single Half Sine-Wave, Superimposed on Rated Load (JEDEC Method)	I_{FSM}	125							A
Peak Forward Voltage at 8.0A DC (Note1)	V_F	1.0				1.3		1.7	V
Maximum DC Reverse Current @T_J=25℃ at Rated DC Blocking Voltage @T_J=100℃	I_R	10 150							μA
Maximum Reverse Recovery Time (Note 2)	T_{RR}	35							nS
Typical Junction Capacitance (Note3)	C_J	40							pF
Typical Thermal Resistance Junction to Ambient	$R_{\theta JA}$	2.5							℃/W
Operating Junction Temperature Range	T_J,T_{STG}	-55 to + 150							℃

Notes: 1. 300uS pulse width, 2%duty cycle.

2. Measured with IF=0.5A,IR=1A,IRR=0.25A .
3. Measured at 1.0 MHz and applied reverse voltage of 4.0V DC.
4. The typical data above is for reference only

Download from alldatasheet.com

Fig. 1 - Forward Current Derating Curve

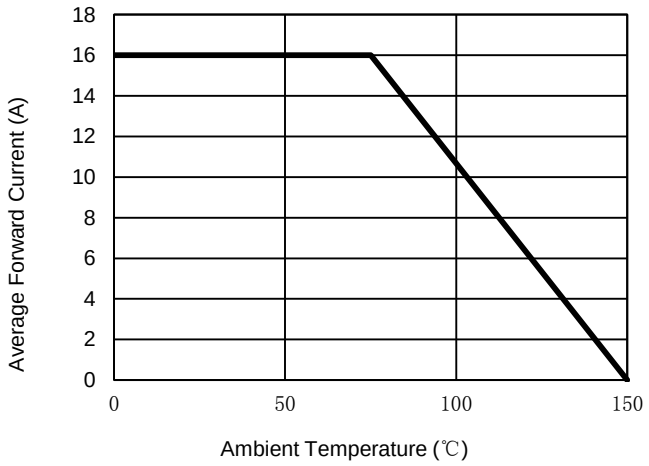

Fig. 2 - Maximum Non-Repetitive Surge Current

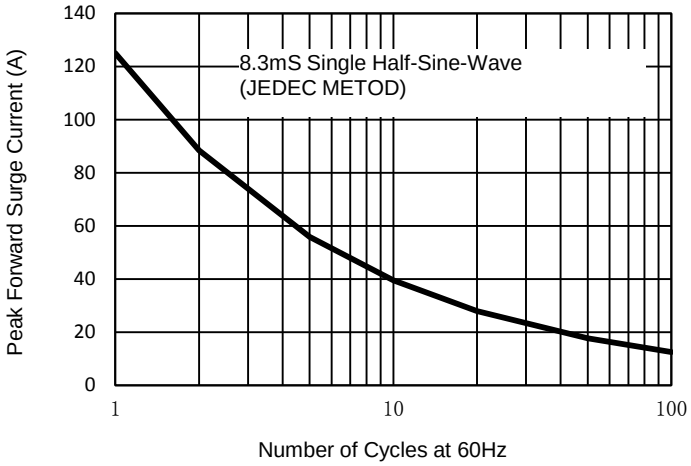

Fig. 3 - Typical Reverse Characteristics

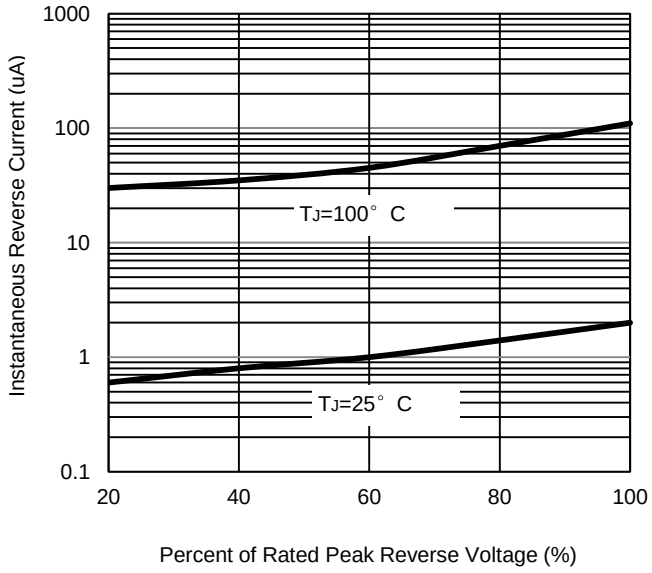

Fig. 4 - Typical Forward Characteristics

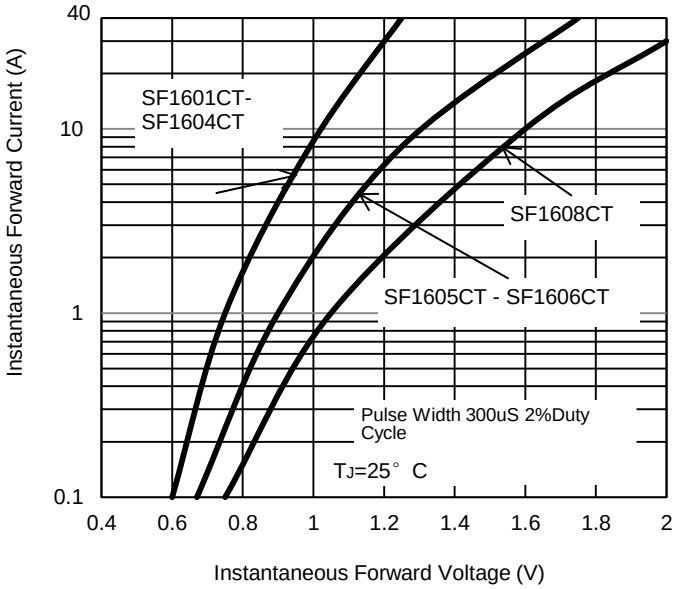

Fig. 5 - Typical Junction Capacitance

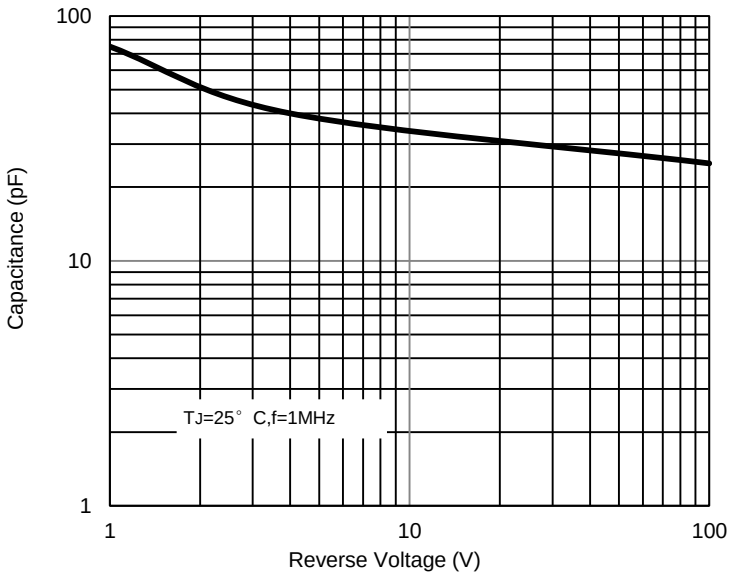

The curve above is for reference only.

Download from alldatasheet.com

Disclaimer

ALL specifications and data are subject to be changed without notice to improve reliability function or design or other reasons.

HY makes no warranty, representation or guarantee regarding the suitability of the products for any particular purpose or the co-tinuing production of any product. To the maximum extent permitted by applicable law, HY disclaims (i) any and all liability arising out of the application or use of any product, (ii) any and all liability, including without limitation special,consequential or incidental d-amages, and (iii) any and all implied warranties, including warranties of fitness for particular purpose, non-infringement and merch-antability.

Statements regarding the suitability of products for certain types of applications are based on HY's knowledge of typical require-ments that are often placed on HY products in generic applications. Such statements are not binding statements about the suitabi-lity of products for a particular application. It is the customer's responsibility to validate that a particular product with the properties described in the product specification is suitable for use in a particular application.Parameters provided in datasheets and specific-ations may vary in different applications and performance may vary over time. All operating parameters, including typical paramet-ers, must be validated for each customer application by the customer's technical experts. Product specifications do not expand or otherwise modify HY's terms and conditions of purchase, including but not limited to the warranty expressed therein.

Except as expressly indicated in writing, HY products are not designed for use in medical, life-saving, or life-sustaining applicati-ons or for any other applications in which the failure of the HY product could result in personal injury or death. Customers using or selling HY products not expressly indicated for use in such applications do so at their own risk.Please contact authorized HY pers-onnel to obtain written terms and conditions regarding products designed for such applications.

No license, express or implied, by estoppel or otherwise, to any intellectual property rights is granted by this document or by any conduct of HY. Product names and markings noted herein may be trademarks of their respective owners.

Download from alldatasheet.com