Patent Pending

Top View

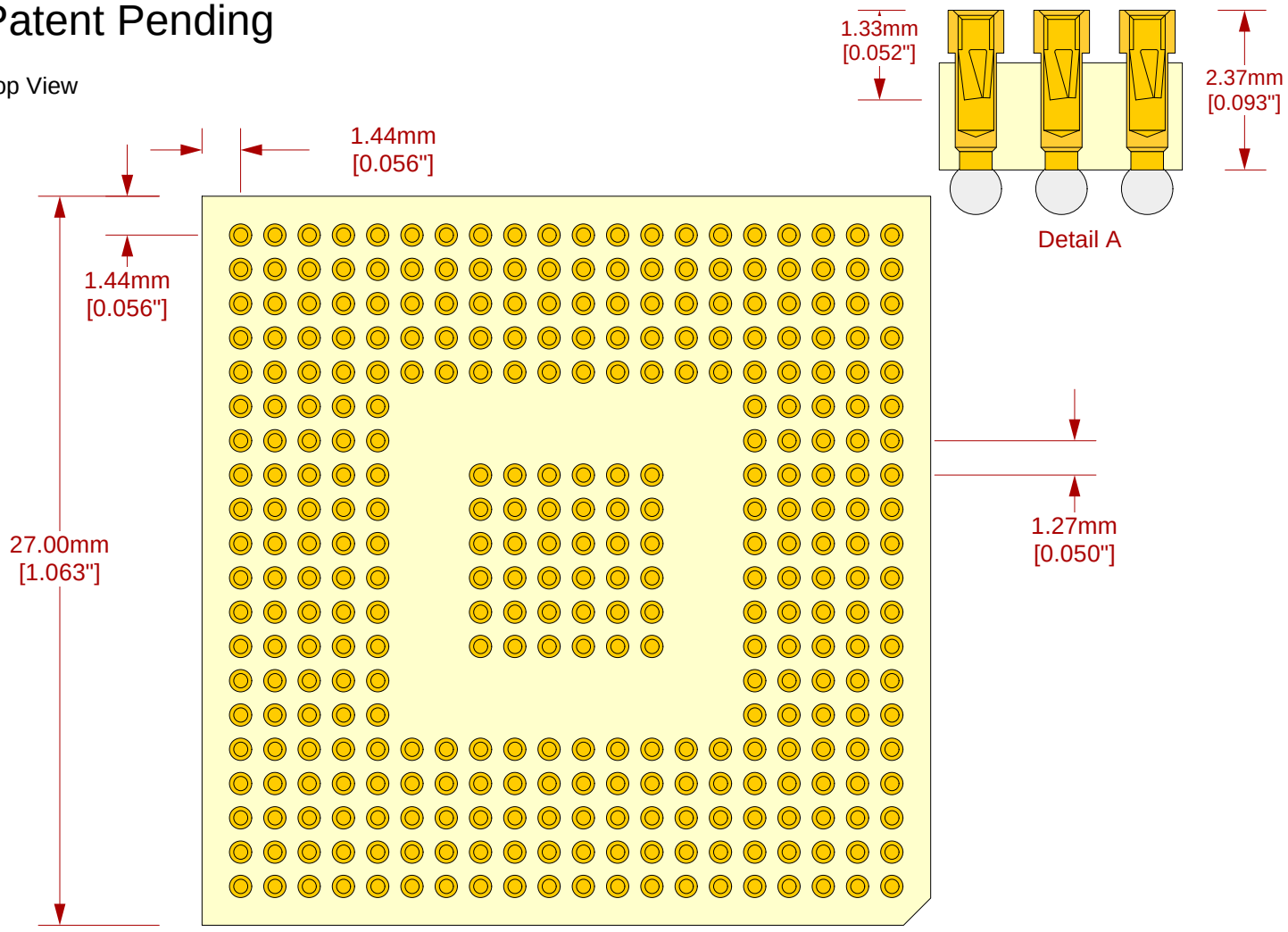

Side View

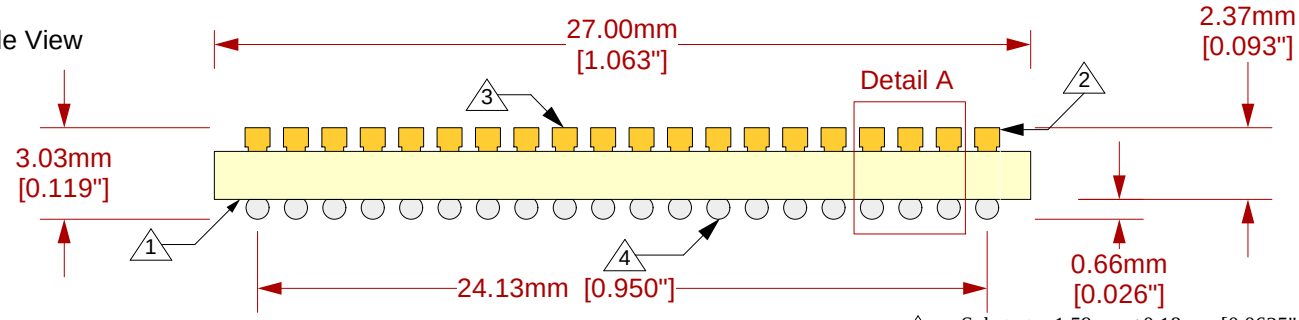

CONTACT DATA
Accepts 0.20mm - 0.33mm Diameter pins
3-finger
37/25 gram, Initial insertion force (with 0.254mm/0.203mm dia. pin)
30/22 gram, normal force (with 0.254mm/0.203mm dia. pin)
20/17 gram, extraction force (with 0.254mm0.203mm dia. pin)

1	Substrate: 1.59mm ±0.18mm [0.0625" ±0.007"] FR4/G10 or equivalent high temp material.
2	Pins: material- Brass Alloy 360 1/2 hard; finish- 0.25µm [10µ"] Au over 1.27µm [50µ"] Ni (min.).
3	Contacts: Beryllium Copper Alloy172, HT; Finish- 0.25µm [10µ"] Au over 1.27µm [50µ"] Ni (min.).
4	Balls: Eutectic 63/37 SnPb.

Description: Giga-snaP BGA SMT Foot
336 position (1.27mm pitch) gold plated female receptacle pins to SMT solder balls (BGA type). Pin asignment 1:1.

Tolerances: diameters ±0.03mm [±0.001"], PCB perimeters ±0.13mm [±0.005"], PCB thicknesses ±0.18mm [±0.007"], pitches (from true position) ±0.08mm [±0.003"], all other tolerances ±0.13mm [±0.005"] unless stated otherwise. Materials and specifications are subject to change without notice.

SF-BGA336B-B-32 Drawing	Status: Released	Scale: 4:1	Rev: A
© 2005 IRONWOOD ELECTRONICS, INC. PO BOX 21151 ST. PAUL, MN 55121 Tele: (651) 452-8100 www.ironwoodelectronics.com	Drawing: M.A.Fedde	Date: 12/23/05	
	File: SF-BGA336B-B-32 Dwg	Modified:	