NEW!

SMT Power Inductors – SER1400 Series



- Designed for high current power supply applications
- Flat wire windings provide exceptionally low DCR
- Specially formed terminations provide small footprint
- Isat ratings as high as 85 A
- Other inductance, DCR, height combinations are possible

Designer's Kit C427 contains 3 each of all values

Core material Ferrite

Terminations RoHS compliant tin-silver over copper. Other terminations available at additional cost.

Ambient temperature –40°C to +125°C with Irms current, +125°C to +165°C with derated current

Storage temperature Component: –40°C to +125°C. Packaging: –40°C to +80°C

Resistance to soldering heat Max three 40 second reflows at +260°C, parts cooled to room temperature between cycles

Moisture Sensitivity Level (MSL) 1 (unlimited floor life at <30°C / 85% relative humidity)

Failures in Time (FIT) / Mean Time Between Failures (MTBF) 38 per billion hours / 26,315,789 hours, calculated per Telcordia SR-332

PCB washing Only pure water or alcohol recommended

High Isat for high Isat applications

Part number[1]	Inductance[2] ±20% (µH)	DCR typ[3] (mOhms)	DCR max[3] (mOhms)	SRF typ[4] (MHz)	Isat (A)[5] 10% drop	Isat (A)[5] 20% drop	Isat (A)[5] 30% drop	Irms (A)[6] 20°C rise	Irms (A)[6] 40°C rise	Height max (inches / mm)
SER1412-301ME_	0.30	1.30	1.43	154	85.0	85.0	85.0	30	37	0.498 / 12,66
SER1412-501ME_	0.50	1.30	1.43	122	52.0	54.5	55.5	30	37	0.498 / 12,66
SER1412-681ME_	0.68	1.30	1.43	100	40.0	41.0	42.3	30	37	0.498 / 12,66
SER1412-102ME_	1.0	1.30	1.43	78	29.0	31.5	32.5	30	37	0.498 / 12,66
SER1412-152ME_	1.5	1.30	1.43	62	22.0	24.0	25.0	30	37	0.498 / 12,66
SER1412-202ME_	2.0	1.30	1.43	50	17.0	19.0	20.0	30	37	0.498 / 12,66
SER1412-362ME_	3.6	1.30	1.43	35	11.0	12.1	12.1	30	37	0.498 / 12,66

Low DCR for high Irms applications

Part number[1]	Inductance[2] ±20% (µH)	DCR typ[3] (mOhms)	DCR max[3] (mOhms)	SRF typ[4] (MHz)	Isat (A)[5] 10% drop	Isat (A)[5] 20% drop	Isat (A)[5] 30% drop	Irms (A)[6] 20°C rise	Irms (A)[6] 40°C rise	Height max (inches / mm)
SER1408-301ME_	0.30	0.48	0.55	140	38.0	39.5	40.5	38	42	0.325 / 8,26
SER1408-501ME_	0.50	0.48	0.55	83	25.5	29.5	30.5	38	42	0.325 / 8,26
SER1408-681ME_	0.68	0.48	0.55	63	20.0	22.2	22.8	38	42	0.325 / 8,26
SER1408-102ME_	1.0	0.48	0.55	48	11.2	14.0	15.5	38	42	0.325 / 8,26
SER1410-152ME_	1.5	0.90	0.99	53	17.0	19.0	20.5	33	39	0.416 / 10,56
SER1410-202ME_	2.0	0.90	0.99	45	12.0	15.0	16.0	33	39	0.416 / 10,56

1. When ordering, please specify **termination** and **packaging** codes:

SER1410-202ME D

Termination: **E** = RoHS compliant tin-silver over copper. Special order: **T** = RoHS tin-silver-copper (95.5/4/0.5) or **S** = non-RoHS tin-lead (63/37).

Packaging: **D** = 13″ machine-ready reel. EIA-481 embossed plastic tape.

B = Less than full reel. In tape, but not machine ready. To have a leader and trailer added ($25 charge), use code letter D instead.

2. Inductance measured at 100 kHz, 0.1 Vrms, 0 Adc on an Agilent/HP 4263B LCR meter or equivalent.
3. DCR measured on a Keithley 580 micro-ohmmeter or equivalent.
4. SRF measured using an Agilent/HP 8753D network analyzer and a Coilcraft SMD-D test fixture.
5. DC current at which the inductance drops the specified amount from its value without current.
6. Current that causes the specified temperature rise from 25°C ambient.
7. Electrical specifications at 25°C.

Refer to Doc 362 "Soldering Surface Mount Components" before soldering.

Coilcraft®

Specifications subject to change without notice.
Please check our website for latest information. Document 609-1 Revised 01/22/10

1102 Silver Lake Road Cary, Illinois 60013 **Phone** 847/639-6400 **Fax** 847/639-1469
E-mail info@coilcraft.com **Web** http://www.coilcraft.com

© Coilcraft, Inc. 2010

NEW!

RoHS COMPLIANT

SMT Power Inductors - SER1400 Series

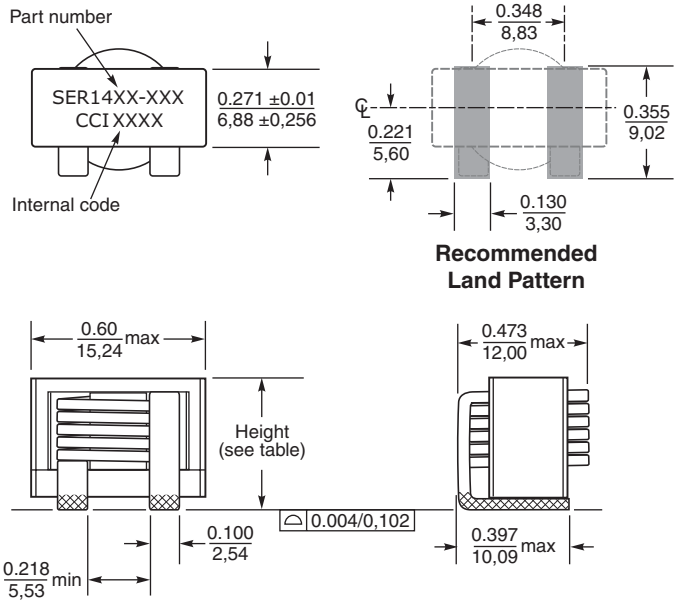

Dimensions are in inches / mm

Irms Derating

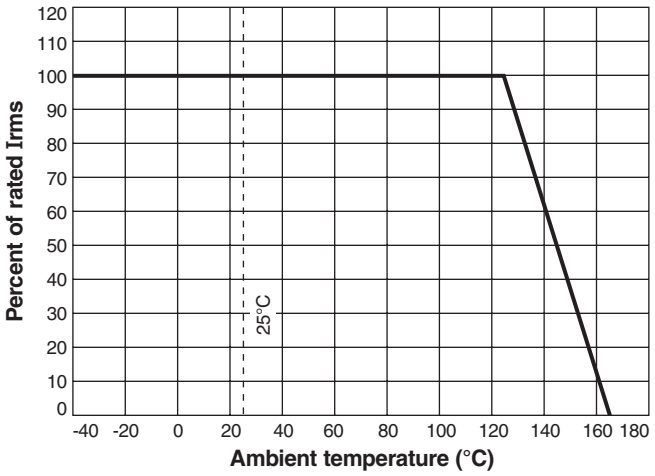

Series	Height max (inches/ mm)	Weight
SER1408	0.325 / 8,26	3.5 – 3.8 g
SER1410	0.416 / 10,56	4.8 – 5.2 g
SER1412	0.498 / 12,66	6.1 – 6.7 g

Packaging

SER1408 350/13″ reel Plastic tape: 32 mm wide, 0.5 mm thick, 20 mm pocket spacing, 8.6 mm pocket depth

SER1410 300/13″ reel Plastic tape: 32 mm wide, 0.5 mm thick, 20 mm pocket spacing, 10.8 mm pocket depth

SER1412 250/13″ reel Plastic tape: 32 mm wide, 0.5 mm thick, 20 mm pocket spacing, 12.8 mm pocket depth

1102 Silver Lake Road Cary, Illinois 60013 **Phone** 847/639-6400 **Fax** 847/639-1469
E-mail info@coilcraft.com **Web** http://www.coilcraft.com

© Coilcraft, Inc. 2010

NEW!

RoHS COMPLIANT

SMT Power Inductors - SER1400 Series

L vs Frequency (High Isat Versions)

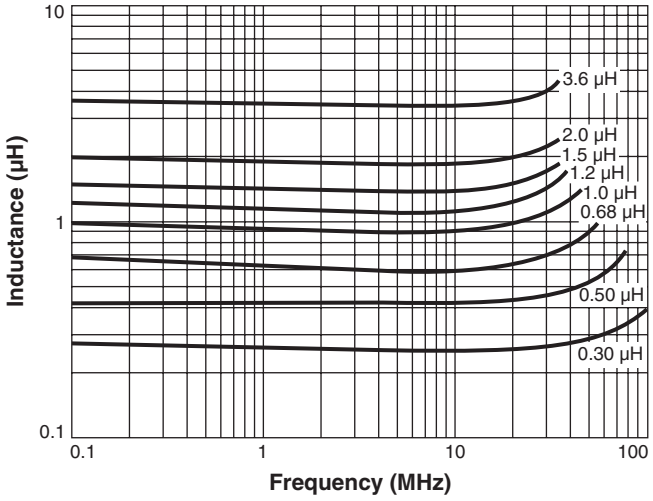

L vs Current (High Isat Versions)

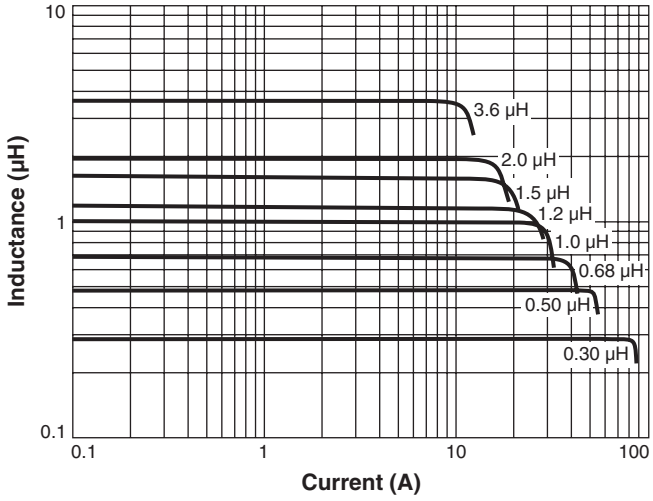

L vs Frequency (Low DCR Versions)

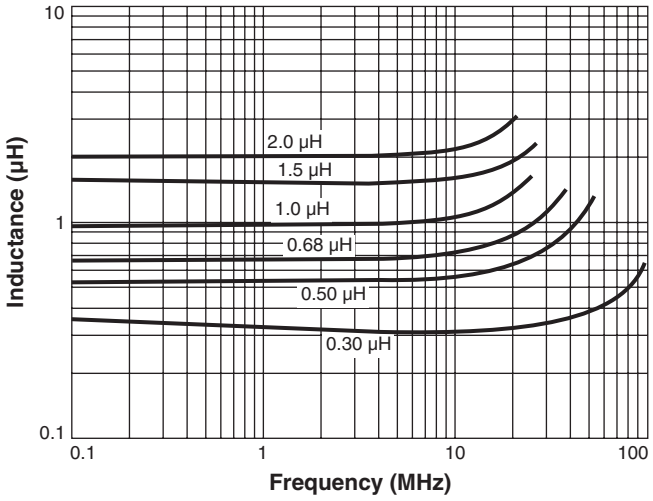

L vs Current (Low DCR Versions)

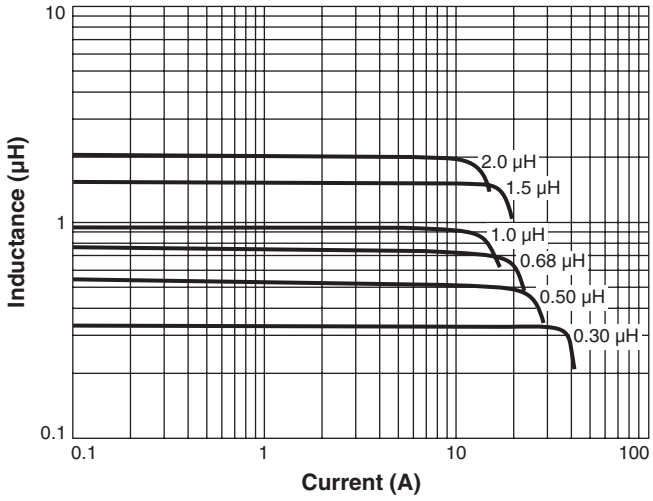

1102 Silver Lake Road Cary, Illinois 60013 **Phone** 847/639-6400 **Fax** 847/639-1469
E-mail info@coilcraft.com **Web** http://www.coilcraft.com

© Coilcraft, Inc. 2010