# Solid Optical Fingerprint Sensor
# SEF-A1F1

## OUTLINE

An optical sweep-type compact fingerprint sensor. Eliminates the shortcomings of conventional optical fingerprint sensors, which are large and heavy due to use of lenses and prisms. The interdigital scattered light method realizes stable, high-accuracy detection at low-cost with a major reduction in size and weight. Increased resistance to static and shock make this technology ideal for inclusion with a variety of devices.

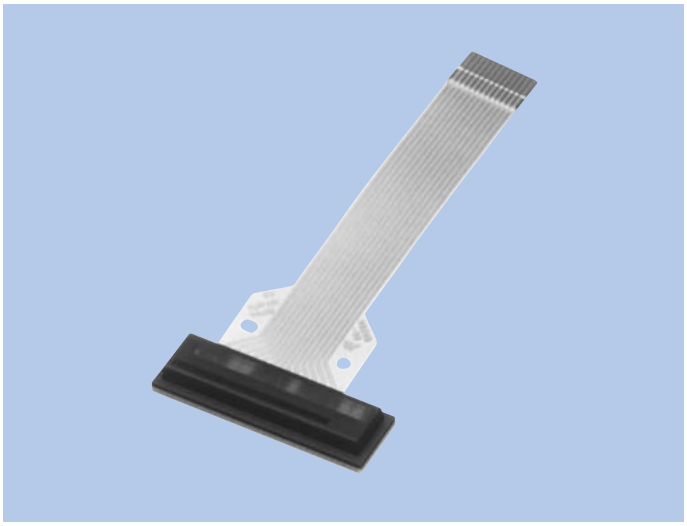

## FEATURES

1. Small size and light weight achieved by molding optical components as one piece.
2. The semiconductor is not exposed, giving excellent durability.
3. Waterproofing improved through use of a flange.
4. The finger scattered light method allows use on wet fingers.
5. The light filter allows use on dry fingers.
6. A signal processing LSI can be provided (supports SPI and parallel I/F).

## USES

1. PC units, portable information devices, network terminals
2. IC card readers
3. Security devices

## SPECIFICATIONS

| Item | Specification |
|---|---|
| Fingerprint detection method | Sweep-type interdigital scattered light method |
| Structure | Single-unit mold including light-source LEDs |
| Pixels | 600dpi–256 pixels/line |
| Sweep speed | 10cm/sec |
| Temperature range | Storage: –20 to +80°C, Operation:–5 to +70°C |
| Electrostatic discharge resistance | 20kV or greater |
| Power source voltage | 5.0±0.5V |
| Consumption current | 35mA typ. |
| Dimensions | 18.2 (W) × 4.8 (D) × 2.8 (H) mm (not including flange) |

*Specifications may be changed for the purpose of improvement and upgrading.

## DIMENSIONS

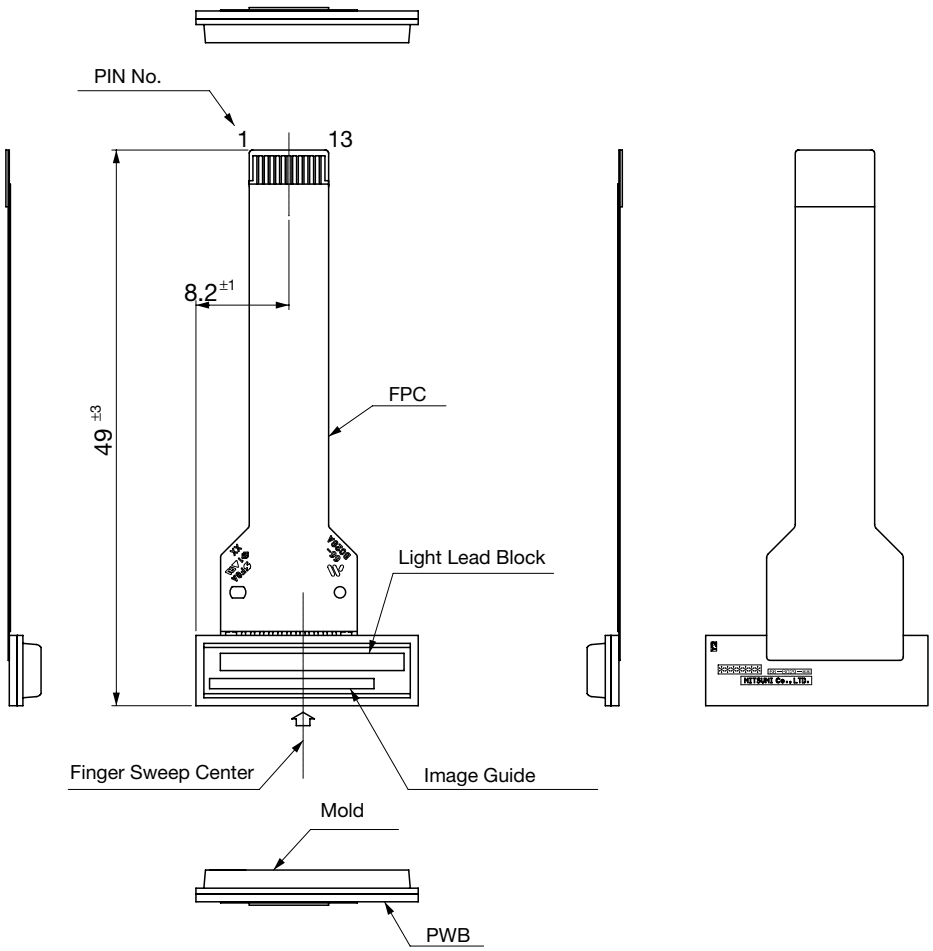


Unit: mm