SEC1403E-TG

- External Shape Type : 3.0×1.5 Surface Mount LED (Inner Lens Type)
- Color : Green
- Lens color : Green Transparent
- Material of a chip : GaP
- Application : Automotive, Consumer Electronics, Office Automation, Indicator
- Feature : Standard Luminous Intensity, RoHS compliant,
  Compatible with heat-resistance of lead-free solder.

●Rating

Description	Symbol	Ratings	Unit	Remark
Forward current	IF	30	mA	
Forward current reduction	⊿IF	-0.45	mA/℃	Avobe25℃
Pulse forward current	IFP	100	mA	f=1kHz tw≦100μs
Reverse voltage	VR	3	V	
Operating temperature	Topr	−30～ 85	℃	
Storage temperature	Tstg	−30～100	℃	

●Photoelectric characteristic (Ta=25℃)

Description	Symbol	Conditions	Min	Typ	Max	Unit
Forward voltage	VF	IF = 10mA		2.0	2.5	V
Reverse current	IR	VR = 3V			50	μA
Luminous intensity	IV	IF = 20mA	8	15		mcd
Peak wavelength	λp	IF = 10mA		558		nm
Dominant wavelength	λd	IF = 10mA		564		nm
Spectral bandwidth	⊿λ	IF = 10mA		20		nm
Directional angle	2θ1/2	IF = 10mA		80		deg.

●Luminous intensity rank (Ta=25℃)

rank	Luminous intensity range(mcd)		
B	8	～	14
C	10	～	19
D1	16	～	28
D2	23	～	

●Characteristic data

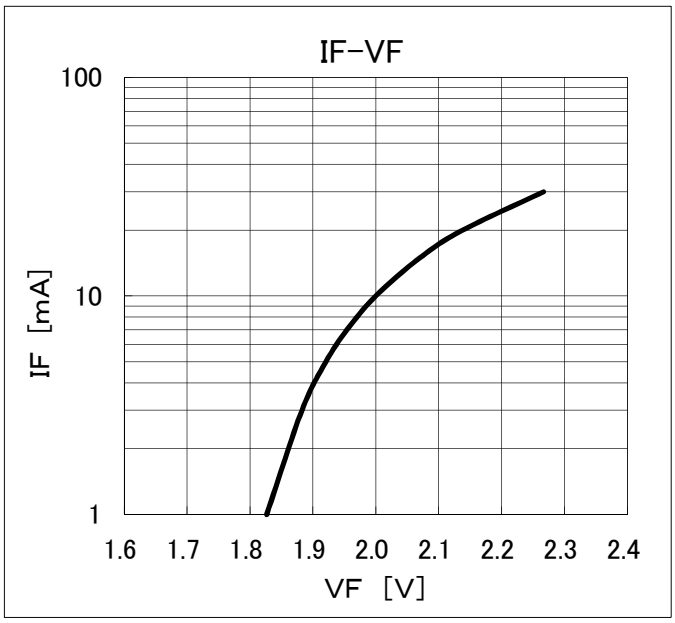

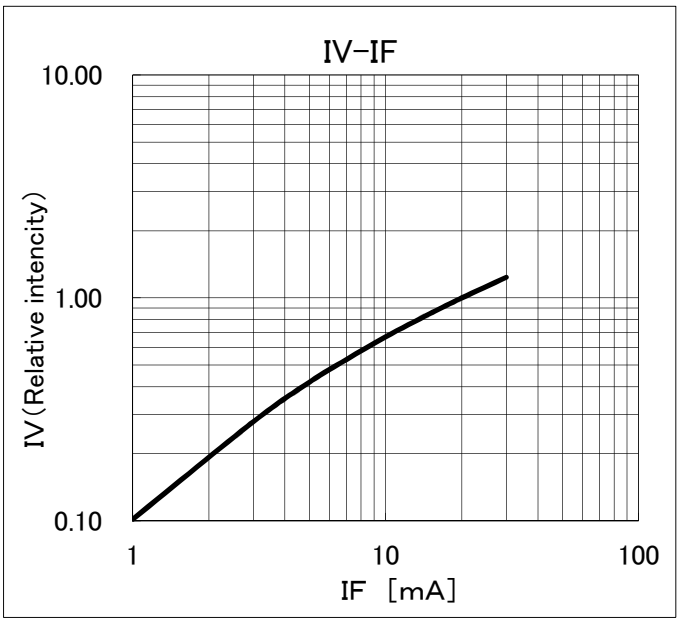

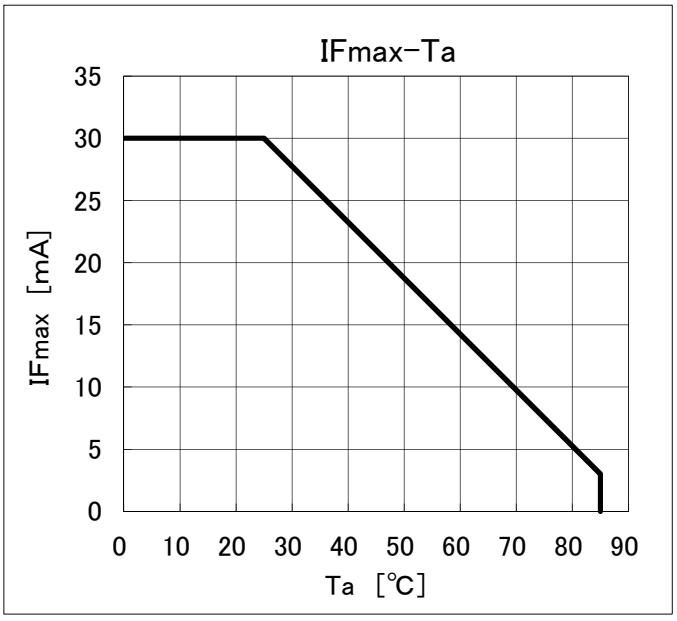

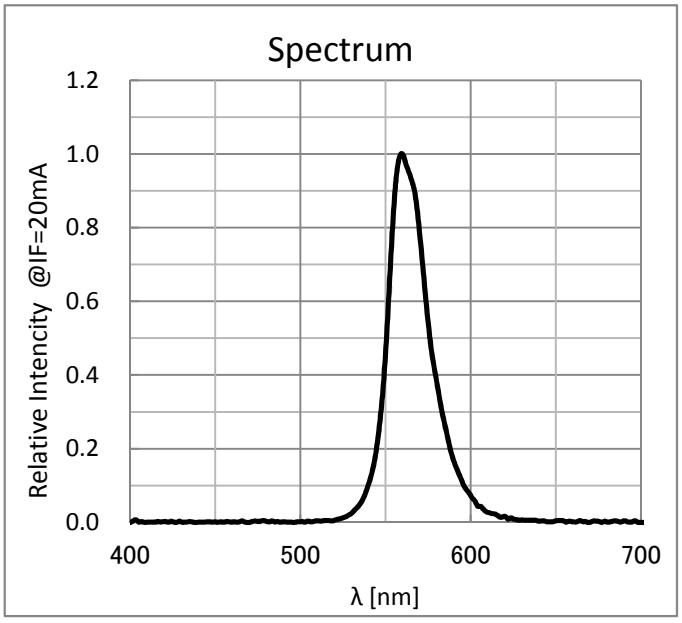

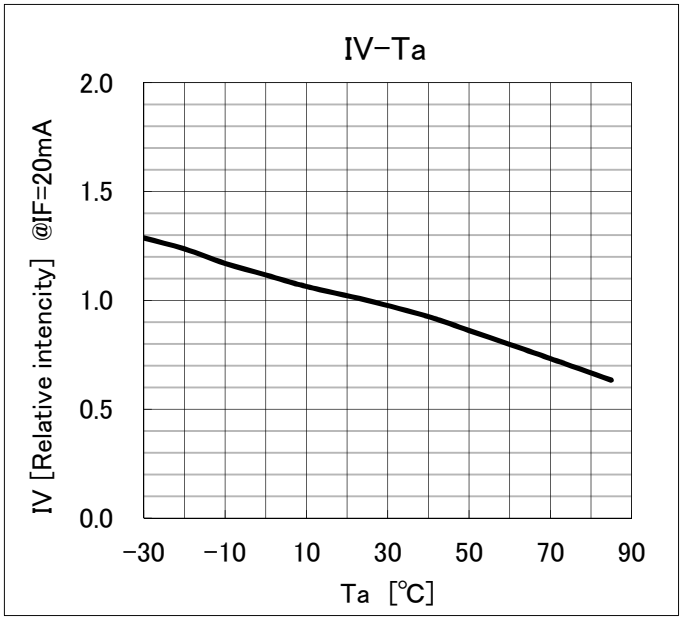

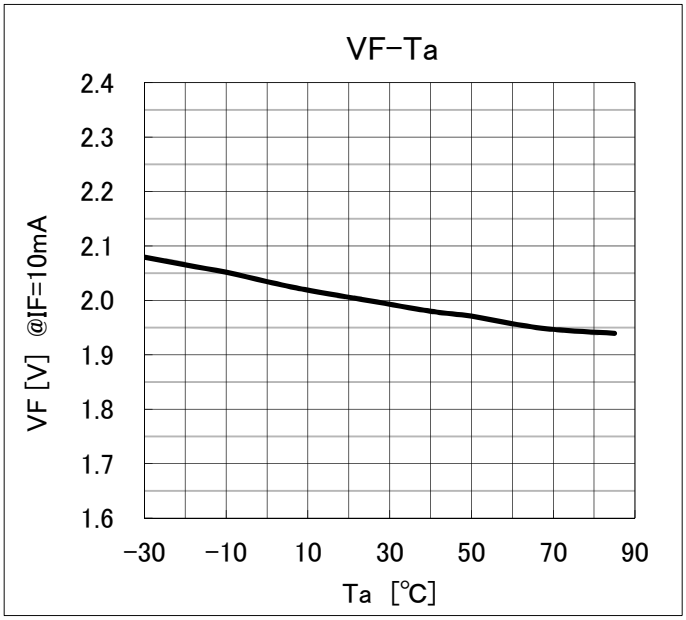

Directional angle

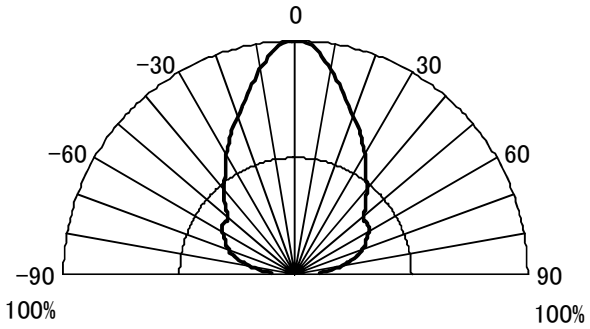

● Outline

SEC1003 Series
Outline dimensions

Part in bulk (10/1)

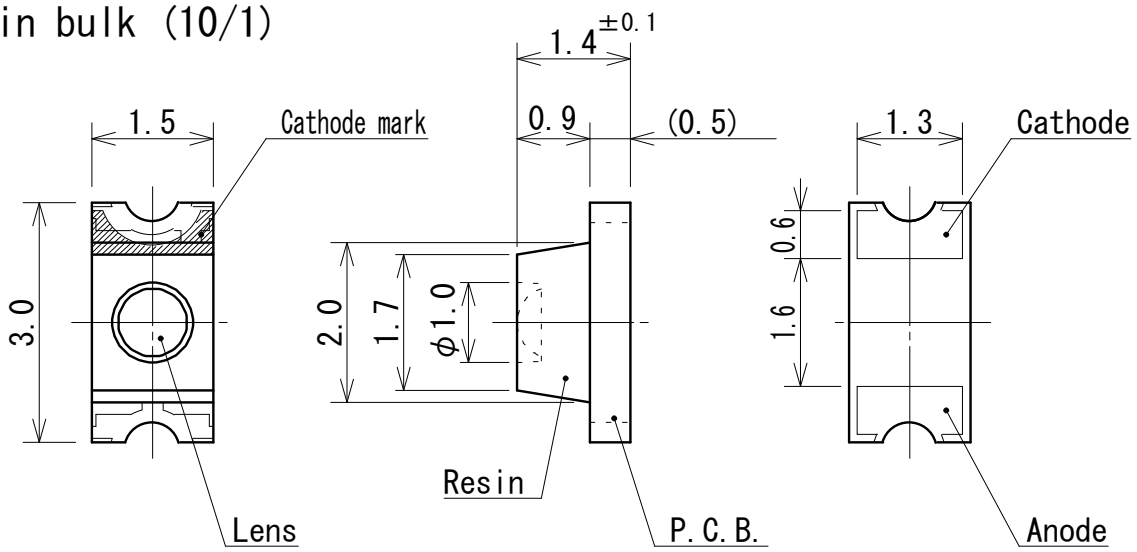

Embossed taping (5/1)

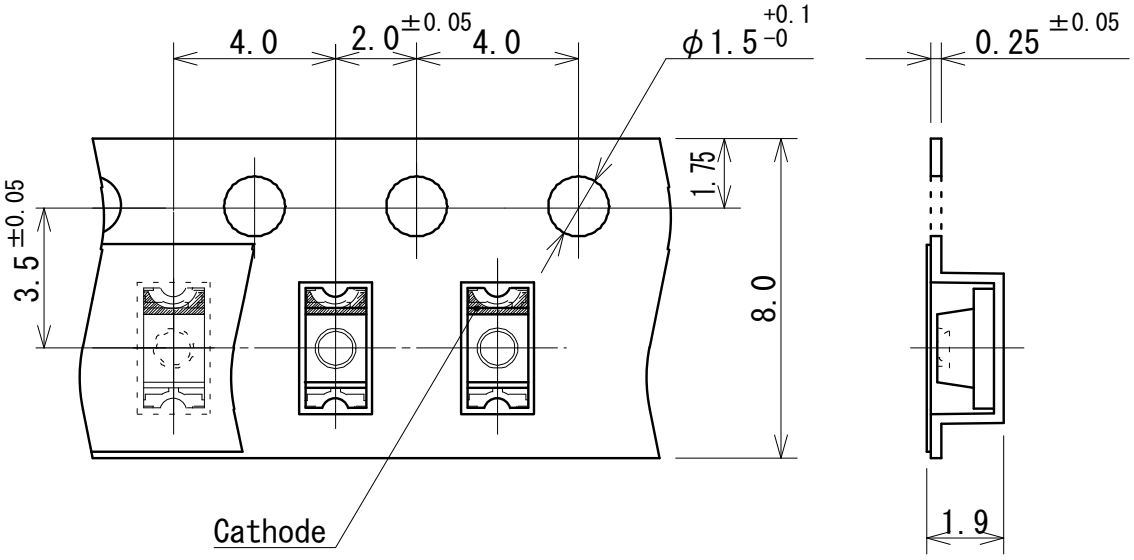

Tolerance ±0.2

● Soldering conditions

Following soldering conditions are recommended.

① Reflow conditions(at the surface of LED resin)

Pre-heat :150 ～ 180 ℃、60 ～ 120 sec

Soldering temperature: Soldering time more than 220℃ is less than 40 sec.

Peak temperature is should be is less than 260℃.

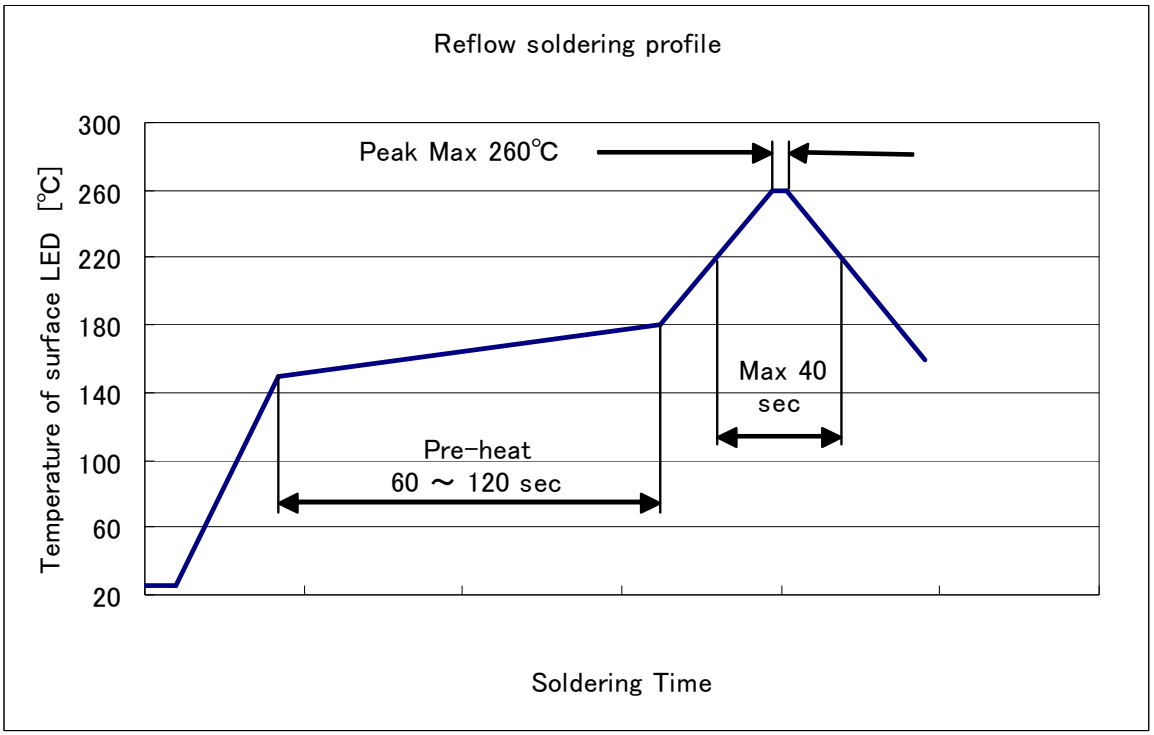

② Manual soldering

Temperature of soldering iron tip should be 350±10℃ for 3 seconds, which shall apply to only one soldered point and once for the each soldered point.

③ Recommendable soldering pattern

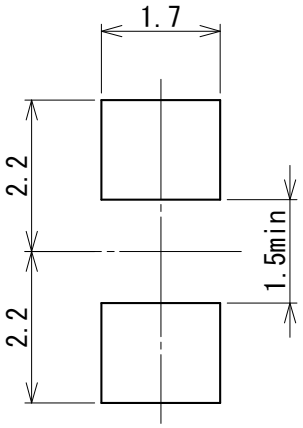

Unit:mm

● Attention after opened

The LED is in SMD package. When the LED is mounted by means of soldering and the resin is unusually damp, soldering may cause interfacial defoliation.
This occurs when a drastic temperature change causes moisture in the resin to evaporate and to swell. Therefore, attention to the below must be paid.

① Atmosphere when using the LEDs after package is opened
After opened and mounted, soldering should be carried out quickly.
Following atmosphere is recommended when using (and mounting) the LEDs.

Temperature : 5～30℃ Humidity : less than 70%

② Baking
In case 48 hours have passed after package is opened, LEDs must be dried as follows.

60±5 ℃ for more than 24 hours (taping reel)

③ Storage after package is opened
Following storage conditions are recommended after package is opened.

In case indicator color (blue) of desiccant (ex. silica gel) has disappeared.
LEDs must be dried under the same conditions as ② above.

● Other

① After soldering any mechanical force or excessive vibration should not be applied to LEDs during cooling process until the LEDs cool down to normal temperature.

② Quick cooling must be avoided.

③ The LEDs should not be mounted on warped direction of PCB.

● Reliability test

	Test Items	EIAJ ED-4701	Test Conditions
Life Tests	Steady state operating life	-	Ta=RT、Ifmax t=1000h
Environ -mental Tests	High temperature storage	201	Ta=Tstgmax t=1000h
	Low temperature storage	202	Ta=Tstgmin t=1000h
	Moisture Resistance	103	Ta=60±5℃、RH=90±5% t=1000h
	Temperature cycle	105	Tstgmin(30min)～Tstgmax(30min) 100cycles
	Soldering heat	301	T=260±5℃、t=10s、1time
	Solderaibirity	402	T=245±5℃、t=5±1s、1time、Using flux for Pb free solder
	Drop	-	H=1m、Drop on maple board、10times

Mesurement Item and Criterion Judge Failure

No	Measurement Item	Mark	Criterion Judge Failure
1	Forward Voltage	VF	OK≦V.F.S.×±20%
2	Reverse Current	IR	OK≦U.S.L..×2.0
3	Luminous Intensity	Iv	OK≧I.V.S.×0.5

*Solderability … The Lead shall be covered by solder at least 95%.

Mesurement conditions is based on specifications.
Tstgmax and Tstgmin is absolute maximum ratings.
IFmax and IFPmax is absolute maximum ratings.
U.S.L. is upper limit of standard.
V.F.S. is Initial data of VF.
I.V.S. is Initial data of Luminous Intensity.

● Packing

Packing Material : Aluminum laminated moisture-proof packing
Quantity : 3000 pcs (Minimum order quantity)
Label : See below.

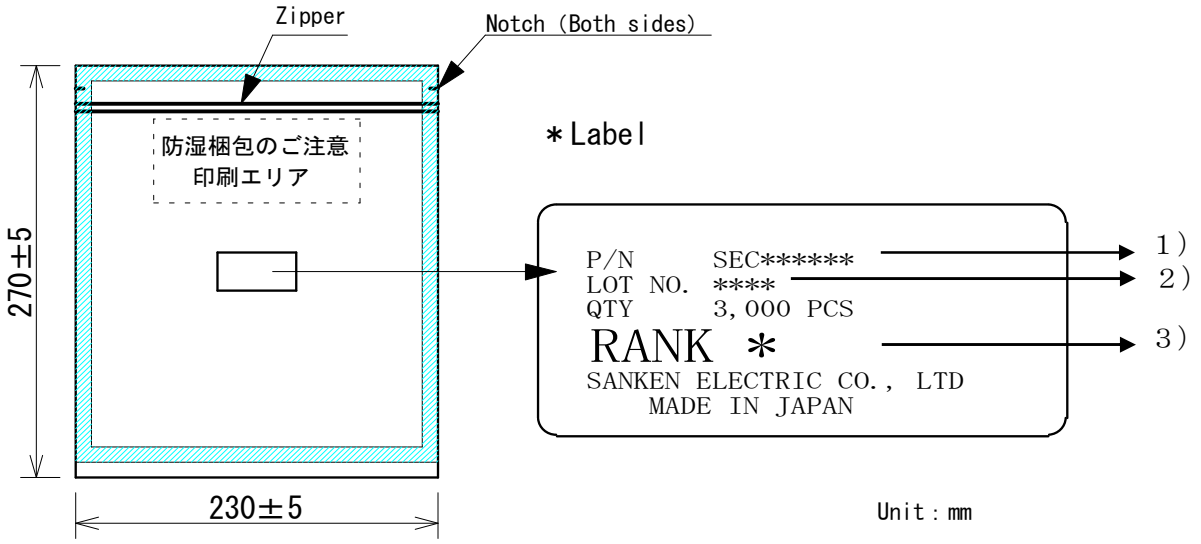

1) Part Number : SEC＊＊＊＊＊＊

2) Lot No. : ＊ ＊ ＊＊
↑ ↑ ↑
① ② ③

①Last digit of year、
②Month
(January～September→Arabic Numeral
October →O、November→N、December→D)
③Day

3) quantity : 3000pcs

4) Rank : ＊
↑
Luminous intensity rank

● Taping reel dimensions

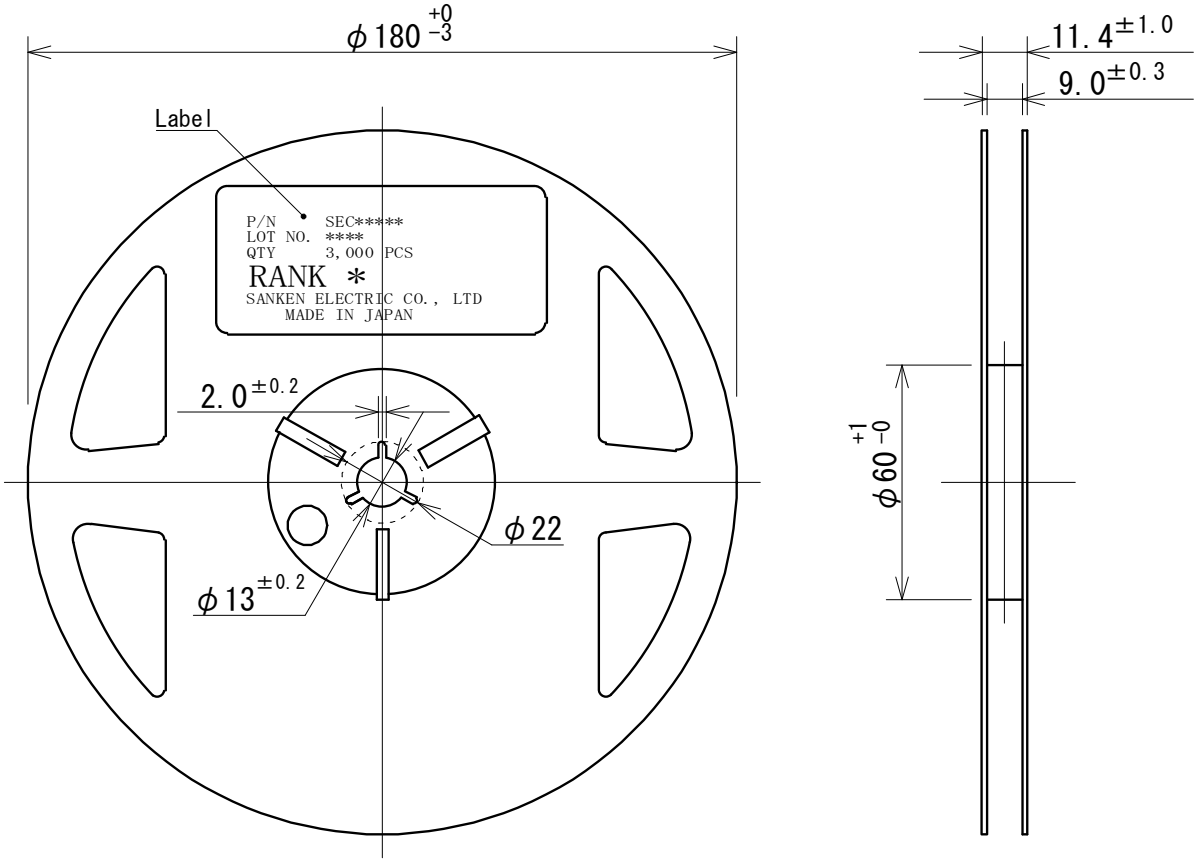

Tolerance ±0.2

①Quantity

The quantity per reel shall be 3000 pcs.

②Accumulative pitch tolerance

Accumulative tolerance per 10 pitches shall be ±0.2mm.

③Adhesion strength of cover tape

Adhesion strength shall be 0.1-0.7N when the cover tape and the carrier tape are torn off at the angle of 10 degrees.

④Packaging

P/N, manufacturing date code number and quantity shall be indicated on a moist-proof package.

● Tips

・The contents written in this data sheet may be changed without a preliminary announcement by improvement etc. When you use it, please check that information is the newest and conclude specifications.

・Application and operation examples described in this publication are quoted for the sole purpose of reference for the use of the products herein and Sanken can assume no responsibility for any infringement of industrial property rights, intellectual property rights or any other rights of Sanken or any third party which may result from its use.

・When using the products specified herein by either combining other products or materials therewith or physically, chemically or otherwise processing or treating the products, please duly consider all possible risks that may result from all such uses in advance and proceed therewith at your own responsibility.

・Although Sanken undertakes to enhance the quality and reliability of its products, the occurrence of failure and defect of semiconductor products at a certain rate is inevitable.
Users of Sanken products are requested to take, at their own risk, preventative measures including safety design of the equipment or systems against any possible injury, death, fires or damages to the society due to device failure or malfunction.

・Sanken products listed in this catalog are designed and intended for the use as components in general purpose electronic equipment or apparatus (home appliances, office equipment, telecommunication equipment measuring equipment, etc.). Before placing an order, the user's written consent to the specifications is requested.
When considering the use of Sanken products in the applications where higher reliability is required (transportation equipment and its control systems, traffic signal control systems or equipment, fire/crime alarm systems, various safety devices, etc.), please contact your nearest Sanken sales representative to discuss and obtain written confirmation of your specifications.
The use of Sanken products without the written consent of Sanken in the applications where extremely high reliability is required (aerospace equipment, nuclear power control systems, life support systems, etc.) is strictly prohibited.

・Anti radioactive ray design is not considered for the products listed herein.

・Gallium arsenic is used in some of the products listed in this document.
These products are dangerous if they are burned or smashed in the process of disposal.
It is also dangerous to drink the liquid or inhale the gas generated by such products when chemically disposed

・Sanken assumes no responsibility for any troubles, such as dropping products caused during transportation out of Sanken's distribution network.

・If there is any discrepancy between English and Japanese, the Japanese version should take precedence over the English one.