Description

SE9017 is a complete constant-current & constant voltage linear charger for single cell lithium-ion and Lithium-Polymer batteries. Its SOT-23 package and low external component count make SE9017 ideally suited for portable applications. Furthermore, the SE9017 is specifically designed to work within USB power specification. At the same time, SE9017 can also be used in the standalone lithium-ion and Lithium-polymer battery chargers.

No external sense resistor is needed, and no blocking diode is required due to the internal MOSFET architecture. Thermal feedback regulates the charge current to limit the die temperature during high power operation or high ambient temperature. The charge voltage is fixed at 4.2V, and the charge current can be programmed externally with a single resistor. The SE9017 automatically terminates the charge cycle when the charge current drops to 1/10th the programmed value after the final float voltage is reached.

When the input supply (wall adapter or USB supply) is removed, the SE9017 automatically enters a low current stage, dropping the battery drain current to less than 2uA. The SE9017 can be put into shutdown mode, reducing the supply current to 20uA.

Other features include charge current monitor, undervoltage lockout, automatic recharge and a status pin to indicate charge termination and the presence of an input voltage. SE9017 is intentionally designed to have slightly negative Tempco. This provides extra protection to Lithium battery during charging.

Pin Configuration

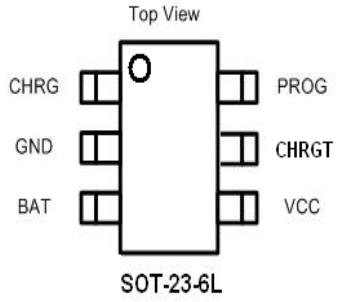

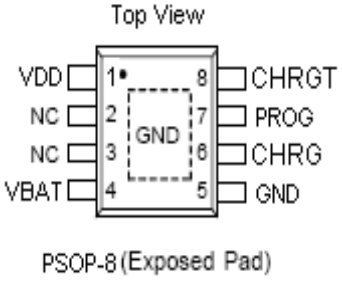

Features

- Programmable Charge Current Up to 800mA.
- No MOSFET, Sense Resistor or Blocking Diode Required.
- Constant-Current/Constant-Voltage Operation with Thermal Protection to Maximize Charge Rate without Risk of Overheating.
- Charges Single Cell Li-Ion Batteries Directly from USB Port.
- Preset 4.2V Charge Voltage with ±1% Accuracy.
- 20uA Supply Current in Shutdown.
- 2.9V Trickle Charge Threshold
- Soft-Start Limits Inrush Current.
- Available in 6-Lead SOT-23 and PSOP-8 (Exposed Pad) Packages.
- RoHS Compliant and 100% Lead (Pb)-Free

Application

- Cellular Telephones, PDA's, MP3 Players.
- Charging Docks and Cradles
- Bluetooth Applications

Application Diagram

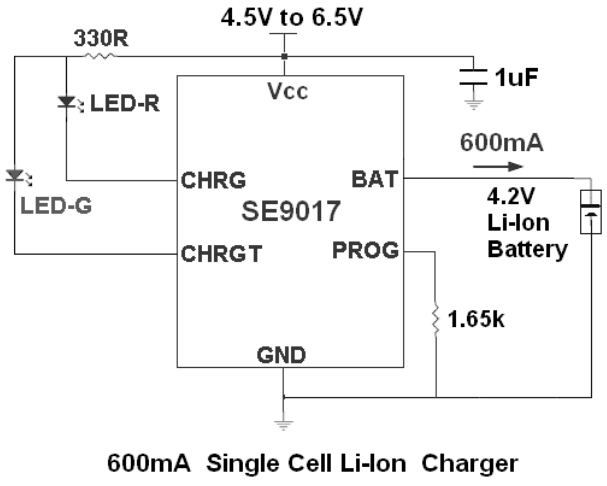

600mA Single Cell Li-Ion Charger

Preliminary and all contents are subject to change without prior notice
© Seaward Electronics Inc., 2007. • www.seawardinc.com.cn • Page 1

Absolute Maximum Rating (1)

Parameter	Symbol	Value	Units
Input Supply Voltage	V_{CC}	7	V
PROG Voltage	V_{PROG}	VCC+0.3	V
BAT Voltage	V_{BAT}	7	V
CHRG Voltage	V_{CHRG}	7	V
BAT Short-Circuit Duration		Continuous	
Thermal Resistance, Junction-to-Ambient	Θ_{JA}	250 (SOT-23-6)	°C/W
		75(PSOP8)	
BAT Pin Current	I_{BAT}	800	mA
PROG Pin Current	I_{PROG}	800	μA
Maximum Junction Temperature	T_J	125	°C
Storage Temperature	T_S	-65 to +125	°C
Lead Temperature (Soldering, 10 sec)		300	°C

Operating Rating (2)

Parameter	Symbol	Value	Units
Supply Input Voltage	V_{IN}	-0.3 to +7	V
Junction Temperature	T_J	-40 to +85	°C

Electrical Characteristics

V_{IN} = 5V; T_J = 25°C; unless otherwise specified.

Symbol	Parameter	Conditions	Min	Typ	Max	Unit
V_{CC}	Input Supply Voltage		4.25		6	V
I_{CC}	Input Supply Current	Charge Mode(3), R_{PROG} = 10k		110	500	μA
		Standby Mode (Charge Terminated)		70		μA
		Shutdown Mode(R_{PROG} Not Connected, V_{CC} < V_{BAT}, or V_{CC} < V_{UV})		20	40	μA
V_{FLOAT}	Regulated Output (Float) Voltage	I_{BAT} = 30mA, I_{CHRG} = 5mA	4.158	4.2	4.242	V
I_{BAT}	BAT Pin Current	R_{PROG} = 10k, Current Mode	90	106	130	mA
		R_{PROG} = 2k, Current Mode		530		mA
		Standby Mode, VBAT = 4.2V	0	+/-1	+/-5	μA
		Shutdown Mode (R_{PROG} Not Connected)		+/-0.5	+/-5	μA
		Sleep Mode, V_{CC} = 0V		+/-1	+/-5	μA
I_{TRIKL}	Trickle Charge Current	V_{BAT} < V_{TRIKL}, R_{PROG} = 10k		10		mA
V_{TRIKL}	Trickle Charge Threshold Voltage	R_{PROG} = 10k, V_{BAT} Rising	2.8	2.9	3.0	V

Preliminary and all contents are subject to change without prior notice
© Seaward Electronics Inc., 2007. • www.seawardinc.com.cn • Page 2

Electrical Characteristics (Continued)

V_{IN} = 5V; T_J = 25°C; unless otherwise specified

Symbol	Parameter	Conditions	Min	Typ	Max	Unit
V_{UV}	V_{CC} Undervoltage Lockout Threshold	From V_{CC} Low to High		3.4		V
V_{UVHYS}	V_{CC} Undervoltage Lockout Hysteresis			100		mV
V_{MSD}	Manual Shutdown Threshold Voltage	PROG Pin Rising		1.25		V
		PROG Pin Falling		1.2		V
V_{ASD}	V_{CC} – V_{BAT} Lockout Threshold Voltage	V_{CC} from Low to High		100		mV
		V_{CC} from High to Low		30		mV
I_{TERM}	C/10 Termination Current Threshold	R_{PROG} = 10k[4]		0.1		mA/mA
		R_{PROG} = 2k		0.1		mA/mA
V_{PROG}	PROG Pin Voltage	R_{PROG} = 10k, Current Mode	0.9	1.03	1.1	V
I_{CHRG}	CHRG Pin Weak Pull-Down Current	V_{CHRG} = 3V		15		μA
V_{CHRG}	CHRG Pin Output Low Voltage	I_{CHRG} = 5mA		0.6		V
ΔV_{RECHRG}	Recharge Battery Threshold Voltage	V_{FLOAT} - V_{RECHRG}		100		mV
T_{LIM}	Thermal Protection Temperature			120		°C
t_{SS}	Soft-Start Time	I_{BAT} = 0 to 1000V/R_{PROG}		100		μs
$t_{RECHARGE}$	Recharge Comparator Filter Time	V_{BAT} High to Low		1		ms
t_{TERM}	Termination Comparator Filter Time	I_{BAT} Falling Below I_{CHG}/10		1000		μs
I_{PROG}	PROG Pin Pull-Up Current			1		μA

Note 1: Exceeding the absolute maximum rating may damage the device.

Note 2: The device is not guaranteed to function outside its operating rating.

Note 3: Supply current includes PROG pin current (approximately 100μA) but does not include any current delivered to the battery through the BAT pin (approximately 100mA).

Note 4: I_{TERM} is expressed as a fraction of measured full charge current with indicated PROG resistor.

Pin Functions

Pin	Pin Function Description	Pin	Pin Function Description
VCC	Positive Input Supply Voltage. Provides power to the charger. VCC can range from 4.25V to 6.5V and should be bypassed with at least a 1μF capacitor.	**CHRG**	Open-Drain Charge Status Output. When the battery is charging, the CHRG pin is pulled low by an internal N-channel MOSFET. When the charge cycle is completed, a weak pull-down of approximately 20uA is connected to the CHRG pin, indicating an “AC present” condition.
GND	Ground.	**PROG**	Charge Current Program, Charge Current Monitor and Shutdown Pin.
BAT	Charge Current Output. Provides charge current to the battery and regulates the final float voltage to 4.2V.	**CHRGT**	Open-Drain Charge Termination Status Output. When the battery is charging, the CHRGT pin is pulled high by an external compenent such as an LED. After the charging is completed, this pin is pulled low by internal N-channel MOSFET and it can be used as a charging termination indicator.

Preliminary and all contents are subject to change without prior notice
© Seaward Electronics Inc., 2007. • www.seawardinc.com.cn • Page 3

BLOCK DIAGRAM

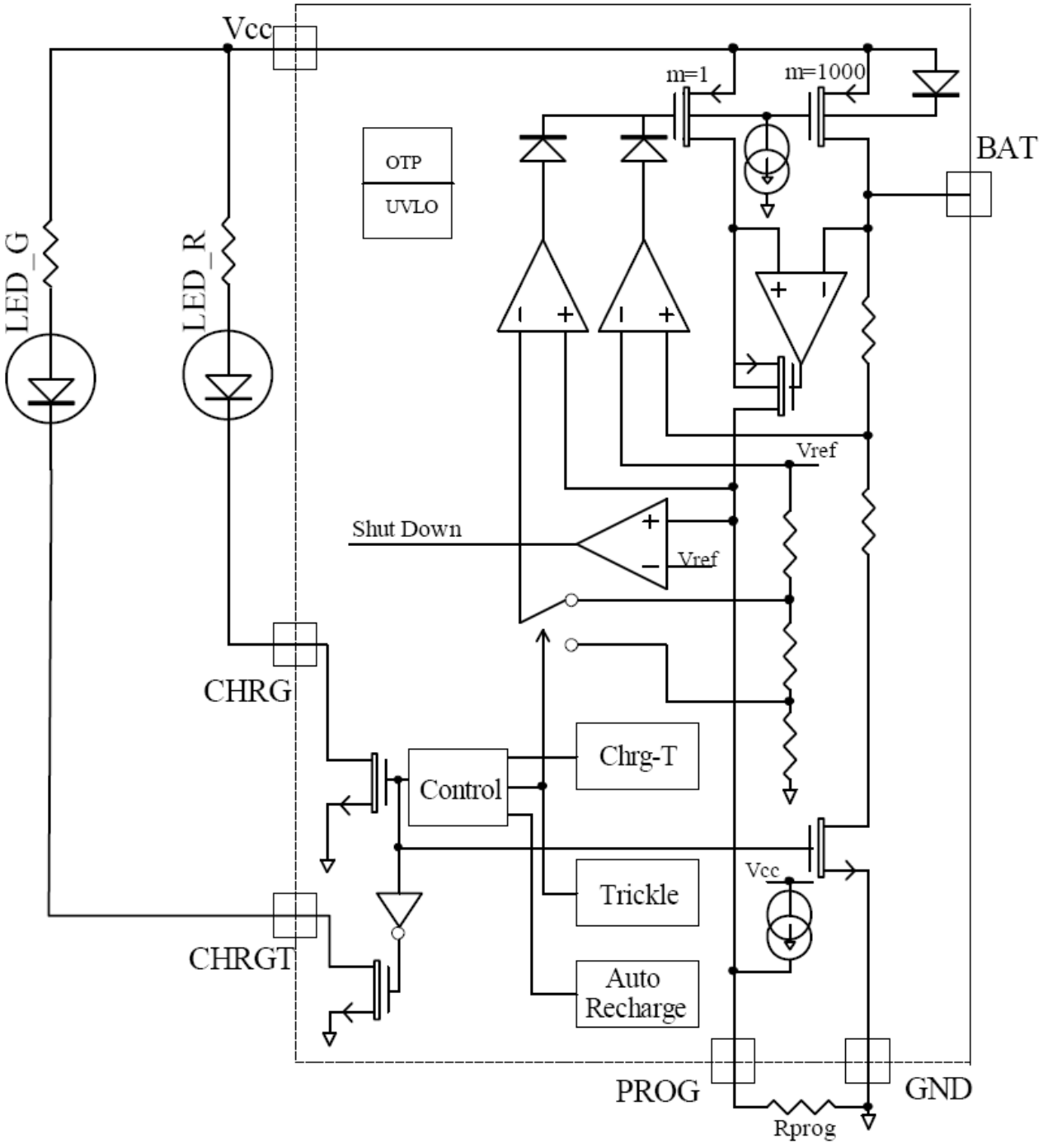

Preliminary and all contents are subject to change without prior notice
© Seaward Electronics Inc., 2007. • www.seawardinc.com.cn • Page 4

Float Voltage vs Supply Voltage

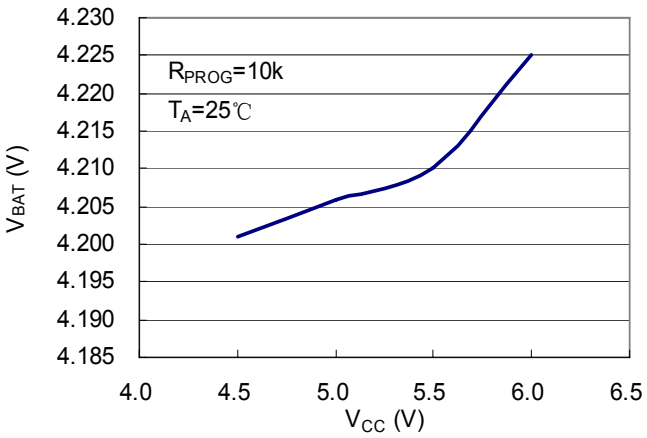

Charge Current vs Supply Voltage

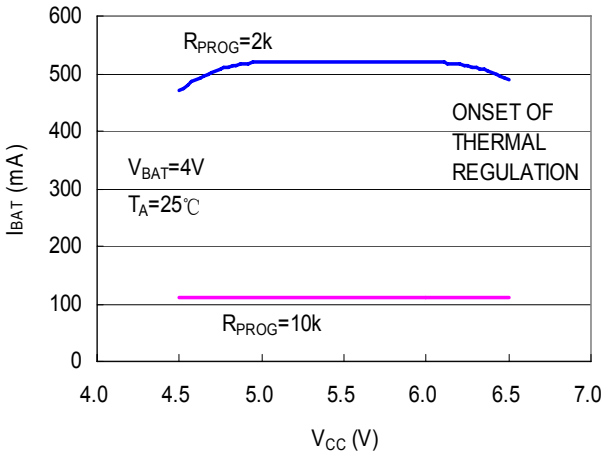

Trickle Charge Current vs Supply Voltage

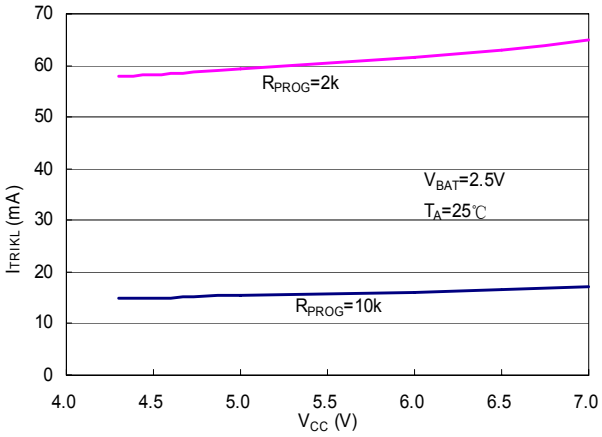

Float Voltage vs Temperature

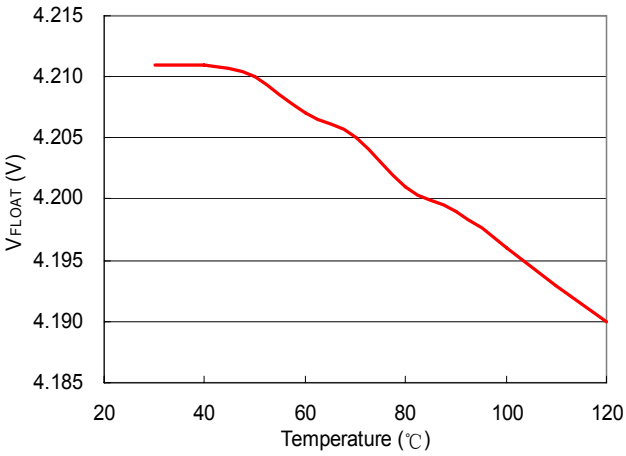

Preliminary and all contents are subject to change without prior notice
© Seaward Electronics Inc., 2007. • www.seawardinc.com.cn • Page 5

Operation

The SE9017 is a single cell lithium-ion battery charger using a constant-current/constant-voltage algorithm. It can deliver up to 800mA of charge current (using a good thermal PCB layout) with a final float voltage accuracy of ±1%. The SE9017 includes an internal P-channel power MOSFET and thermal regulation circuitry. No blocking diode or external current sense resistor is required; thus, the basic charger circuit requires only two external components. Furthermore, the SE9017 is capable of operating from a USB power source.

Normal Charge Cycle

A charge cycle begins when the voltage at the VCC pin rises above the UVLO threshold level and a 1% program resistor is connected from the PROG pin to ground or when a battery is connected to the charger output. If the BAT pin is less than 2.8V, the charger enters trickle charge mode. In this mode, the SE9017 supplies approximately 1/10 the programmed charge current to bring the battery voltage up to a safe level for full current charging.

When the BAT pin voltage rises above 2.8V, the charger enters constant-current mode, where the programmed charge current is supplied to the battery. When the BAT pin approaches the final float voltage (4.2V), the SE9017 enters constant-voltage mode and the charge current begins to decrease. When the charge current drops to 1/10 of the programmed value, the charge cycle ends.

Programming Charge Current

The charge current is programmed using a single resistor from the PROG pin to ground. The battery charge current is 1060 times the current out of the PROG pin. The program resistor and the charge current are calculated using the following equations:

$$R_{PROG} = \frac{1060V}{I_{CHG}}, I_{CHG} = \frac{1060V}{R_{PROG}},$$

The charge current out of the BAT pin can be determined at any time by monitoring the PROG pin voltage using the following equation:

$$I_{BAT} = \frac{V_{PROG}}{R_{PROG}} \bullet 1060$$

This actual current will vary from IC to IC. The typical variation is within +/-20%.

Charge Termination

A charge cycle is terminated when the charge current falls to 1/10th the programmed value after the final float voltage is reached. This condition is detected by using an internal, filtered comparator to monitor the PROG pin. When the PROG pin voltage falls below 100mV for longer than t_{TERM} (typically 1ms), charging is terminated. The charge current is latched off and the SE9017 enters standby mode, where the input supply current drops to 200mA. (Note: C/10 termination is disabled in trickle charging and thermal limiting modes).

When charging, transient loads on the BAT pin can cause the PROG pin to fall below 100mV for short periods of time before the DC charge current has dropped to 1/10th the programmed value. The 1ms filter time (t_{TERM}) on the termination comparator ensures that transient loads of this nature do not result in premature charge cycle termination. Once the average charge current drops below 1/10th the programmed value, the SE9017 terminates the charge cycle and ceases to provide any current through the BAT pin. In this state, all loads on the BAT pin must be supplied by the battery.

The SE9017 constantly monitors the BAT pin voltage

Preliminary and all contents are subject to change without prior notice
© Seaward Electronics Inc., 2007.

in standby mode. If this voltage drops below the4.05V recharge threshold (V_{RECHRG}), another charge cycle begins and current is once again supplied to the battery. To manually restart a charge cycle when in standby mode, the input voltage must be removed and reapplied, or the charger must be shut down and restarted using the PROG pin. Figure 1 shows the state diagram of a typical charge cycle.

Charge Status Indicator (CHRG)

The charge status output has three different states: strong pull-down (~10mA), weak pull-down (~20μA) and high impedance. The strong pull-down state indicates that the SE9017 is in a charge cycle. Once the charge cycle has terminated, the pin state is determined by undervoltage lockout conditions. A weak pull-down indicates that V_{CC} meets the UVLO conditions and the SE9017 is ready to charge. High impedance indicates that the SE9017 is in undervoltage lockout mode: either V_{CC} is less than 100mV above the BAT pin voltage or insufficient voltage is applied to the V_{CC} pin.

Thermal Limiting

An internal thermal feedback loop reduces the programmed charge current if the die temperature attempts to rise above a preset value of approximately 120℃. This feature protects the SE9017 from excessive temperature and allows the user to push the limits of the power handling capability of a given circuit board without risk of damaging the SE9017. The charge current can be set according to typical (not worst-case) ambient temperature with the assurance that the charger will automatically reduce the current in worst-case conditions.

Undervoltage Lockout (UVLO)

An internal undervoltage lockout circuit monitors the input voltage and keeps the charger in shutdown mode until VCC rises above the undervoltage lockout threshold. The UVLO circuit has a built-in hysteresis of 200mV. Furthermore, to protect against reverse current in the power MOSFET, the UVLO circuit keeps the charger in shutdown mode if VCC falls to within 30mV of the battery voltage. If the UVLO comparator is tripped, the charger will not come out of shutdown mode until VCC rises 100mV above the battery voltage.

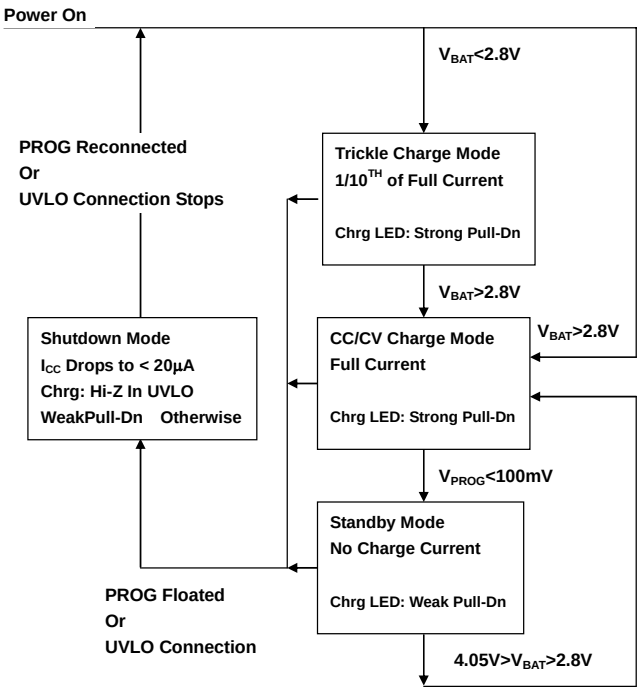

Figure1. State Diagram of a Typical Charge Cycle

Preliminary and all contents are subject to change without prior notice
© Seaward Electronics Inc., 2007. • www.seawardinc.com.cn • Page 7

Application Hints

Stability Considerations

The constant-voltage mode feedback loop is stable without an output capacitor provided a battery is connected to the charger output. With no battery present, an output capacitor is recommended to reduce ripple voltage. When using high value, low ESR ceramic capacitors, it is recommended to add a 1Ω resistor in series with the capacitor. No series resistor is needed if tantalum capacitors are used.

In constant-current mode, the PROG pin is in the feedback loop, not the battery. The constant-current mode stability is affected by the impedance at the PROG pin. With no additional capacitance on the PROG pin, the charger is stable with program resistor values as high as 20k. However, additional capacitance on this node reduces the maximum allowed program resistor. The pole frequency at the PROG pin should be kept above 100kHz.

V_{CC} Bypass Capacitor

Many types of capacitors can be used for input bypassing, however, caution must be exercised when using multilayer ceramic capacitors. Because of the self-resonant and high Q characteristics of some types of ceramic capacitors, high voltage transients can be generated under some start-up conditions, such as connecting the charger input to a live power source. Adding a 1.5Ω resistor in series with a ceramic capacitor will minimize start-up voltage transients.

Power Dissipation

The conditions that cause the SE9017 to reduce charge current through thermal feedback can be approximated by considering the power dissipated in the IC. Nearly all of this power dissipation is generated by the internal MOSFET—this is calculated to be approximately:

$$P_D = (V_{CC} – V_{BAT}) • I_{BAT}$$

The approximate ambient temperature at which the thermal feedback begins to protect the IC is:

$$T_A = 120°C – P_D\theta_{JA}$$

$$T_A = 120°C – (V_{CC} – V_{BAT}) • I_{BAT} • \theta_{JA}$$

Thermal Considerations

Because of the small size of the thin SOT23 package, it is very important to use a good thermal PC board layout to maximize the available charge current. The thermal path for the heat generated by the IC is from the die to the copper lead frame, through the package leads, (especially the ground lead) to the PC board copper. The PC board copper is the heat sink. The footprint copper pads should be as wide as possible and expand out to larger copper areas to spread and dissipate the heat to the surrounding ambient. Other heat sources on the board, not related to the charger, must also be considered when designing a PC board layout because they will affect overall temperature rise and the maximum charge current.

Preliminary and all contents are subject to change without prior notice
© Seaward Electronics Inc., 2007. • www.seawardinc.com.cn • Page 8

Applications

No-load indications

Put a 1uF capacitor between BAT and GND . This makes up of a No-load indications circuit as shown below. If there is not a battery connected to BAT and GND of SE9017 then we can see that LED-R will be flashing at 2.5 Hz/S. If there is a battery connected to BAT and GND Pin of SE9017. Than SE9017 enters normal chargeing cycle.

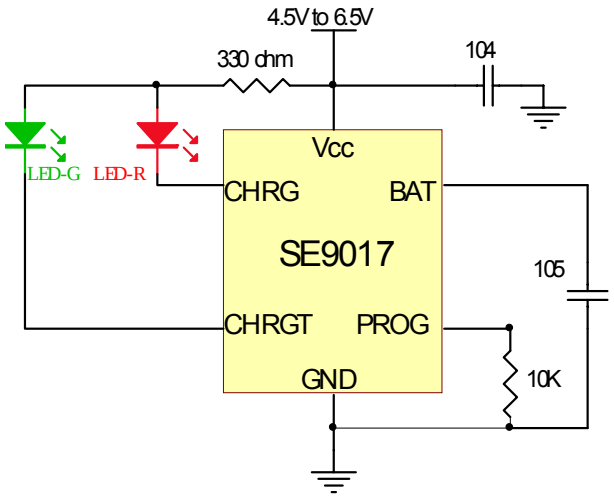

Preliminary and all contents are subject to change without prior notice
© Seaward Electronics Inc., 2007. • www.seawardinc.com.cn • Page 9

OUTLINE DRAWING SOT-23-6L

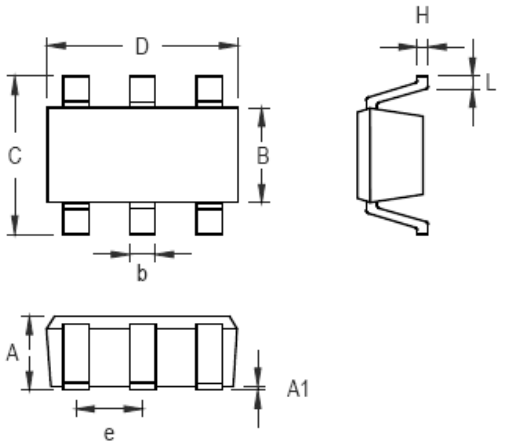

Symbol	Dimensions In Millimeters		Dimensions In Inches	
	Min	Max	Min	Max
A	0.889	1.295	0.031	0.051
A1	0.000	0.152	0.000	0.006
B	1.397	1.803	0.055	0.071
b	0.250	0.560	0.010	0.022
C	2.591	2.997	0.102	0.118
D	2.692	3.099	0.106	0.122
e	0.838	1.041	0.033	0.041
H	0.080	0.254	0.003	0.010
L	0.300	0.610	0.012	0.024

OUTLINE DRAWING PSOP-8

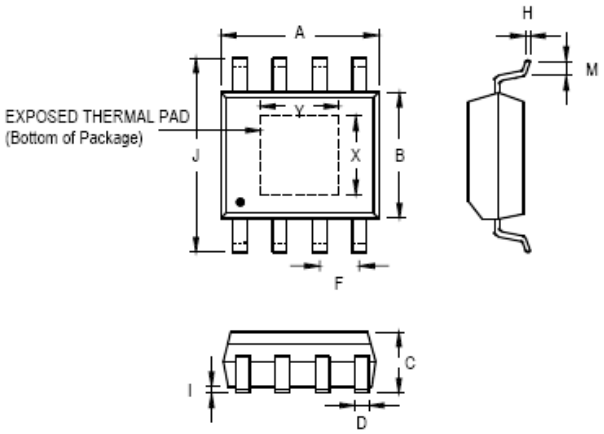

Symbol	Dimensions In Millimeters		Dimensions In Inches	
	Min	Max	Min	Max
A	4.801	5.004	0.189	0.197
B	3.810	3.988	0.150	0.157
C	1.346	1.753	0.053	0.069
D	0.330	0.508	0.013	0.020
F	1.194	1.346	0.047	0.053
H	0.191	0.254	0.008	0.010
I	0.000	0.152	0.000	0.006
J	5.791	6.198	0.228	0.244
M	0.406	1.270	0.016	0.050
X	2.057	2.515	0.081	0.099
Y	2.057	3.404	0.081	0.134

Preliminary and all contents are subject to change without prior notice
© Seaward Electronics Inc., 2007. • www.seawardinc.com.cn • Page 10

Customer Support

Seaward Electronics Incorporated – China

Section B, 2nd Floor, ShangDi Scientific Office Complex, #22 XinXi Road

Haidian District, Beijing 100085, China

Tel: 86-10-8289-5700/01/05

Fax: 86-10-8289-5706

Seaward Electronics Corporation – Taiwan

2F, #181, Sec. 3, Minquan East Rd,

Taipei, Taiwan R.O.C

Tel: 886-2-2712-0307

Fax: 886-2-2712-0191

Seaward Electronics Incorporated – North America

1512 Centre Pointe Dr.

Milpitas, CA95035, USA

Tel: 1-408-821-6600

Last Updated - 4/16/2009