1500W Single Output Power Supply

SE-1500 series



Features :

- AC input active surge current limiting
- Protections: Short circuit / Overload / Over voltage / Over temperature
- Forced air cooling by built-in DC ball bearing fan
- High power density 7.8w/inch^3
- With DC_OK signal output
- Built-in remote ON-OFF control
- Built-in remote sense function
- UL / CUL approved
- Low cost
- 2 years warranty

SPECIFICATION

MODEL		SE-1500-5	SE-1500-12	SE-1500-15	SE-1500-24	SE-1500-27	SE-1500-48
OUTPUT	DC VOLTAGE	5V	12V	15V	24V	27V	48V
	RATED CURRENT	300A	125A	100A	62.5A	55.6A	31.3A
	CURRENT RANGE	0 ~ 300A	0 ~ 125A	0 ~ 100A	0 ~ 62.5A	0 ~ 55.6A	0 ~ 31.3A
	RATED POWER	1500W	1500W	1500W	1500W	1501.2W	1502.4W
	RIPPLE & NOISE (max.) Note.2	150mVp-p	150mVp-p	150mVp-p	150mVp-p	150mVp-p	150mVp-p
	VOLTAGE ADJ. RANGE	3.3 ~ 5.5V	10.8 ~ 13.5V	13.5 ~ 16.5V	21.6 ~ 26.4V	25 ~ 30V	43.2 ~ 56V
	VOLTAGE TOLERANCE Note.3	±2.0%	±1.0%	±1.0%	±1.0%	±1.0%	±1.0%
	LINE REGULATION	±0.5%	±0.5%	±0.5%	±0.5%	±0.5%	±0.5%
	LOAD REGULATION	±2.0%	±0.5%	±0.5%	±0.5%	±0.5%	±0.5%
	SETUP, RISE TIME	150ms, 12ms / 230VAC at full load					
	HOLD UP TIME (Typ.)	26ms / 230VAC at full load					
INPUT	VOLTAGE RANGE	180 ~ 264VAC 254 ~ 370VDC					
	FREQUENCY RANGE	47 ~ 63Hz					
	EFFICIENCY (Typ.)	81%	85%	85%	87%	88%	89%
	AC CURRENT (Typ.)	17.5A / 230VAC					
	INRUSH CURRENT (Typ.)	60A / 230VAC					
	LEAKAGE CURRENT	<3.5mA / 240VAC					
PROTECTION	OVERLOAD	105 ~ 125% rated output power					
		Protection type : Shut down o/p voltage, re-power on to recover					
	OVER VOLTAGE	5.75 ~ 6.75V	14.5 ~ 16.2V	18 ~ 21V	27.6 ~ 32.4V	31 ~ 35V	57.6 ~ 67.2V
		Protection type : Shut down o/p voltage, re-power on to recover					
	OVER TEMPERATURE	95℃±5℃(5V), 85℃±5℃(12V,15V), 80℃±5℃(24V), 75℃±5℃(27V,48V) (TSW1) detect on heatsink of o/p diode					
		Protection type : Shut down o/p voltage, recovers automatically after temperature goes down					
FUNCTION	DC_OK SIGNAL	PSU turn on:3.3V ~ 5.6V PUS turn off:0 ~ 1V					
	REMOTE CONTROL	RC+/RC-: 0 ~ 0.8V power on; 4 ~ 10V power off					
ENVIRONMENT	WORKING TEMP.	-20 ~ +70℃ (Refer to output load derating curve)					
	WORKING HUMIDITY	20 ~ 90% RH non-condensing					
	STORAGE TEMP., HUMIDITY	-40 ~ +85℃, 10 ~ 95% RH					
	TEMP. COEFFICIENT	±0.05%/℃ (0 ~ 50℃)					
	VIBRATION	10 ~ 500Hz, 2G 10min./1cycle, 60min. each along X, Y, Z axes					
SAFETY & EMC	SAFETY STANDARDS	UL60950-1 approved					
	WITHSTAND VOLTAGE	I/P-O/P:3KVAC I/P-FG:1.5KVAC O/P-FG:0.5KVAC					
	ISOLATION RESISTANCE	I/P-O/P, I/P-FG, O/P-FG:100M Ohms / 500VDC / 25℃/ 70% RH					
OTHERS	MTBF	134.5K hrs min. MIL-HDBK-217F (25℃)					
	DIMENSION	278*177.8*63.5mm (L*W*H)					
	PACKING	3.3Kg; 4pcs/14.2Kg/1.14CUFT					
NOTE	1. All parameters NOT specially mentioned are measured at 230VAC input, rated load and 25℃ of ambient temperature. 2. Ripple & noise are measured at 20MHz of bandwidth by using a 12" twisted pair-wire terminated with a 0.1uf & 47uf parallel capacitor. 3. Tolerance : includes set up tolerance, line regulation and load regulation.						

■ Mechanical Specification

Case No.982A Unit:mm

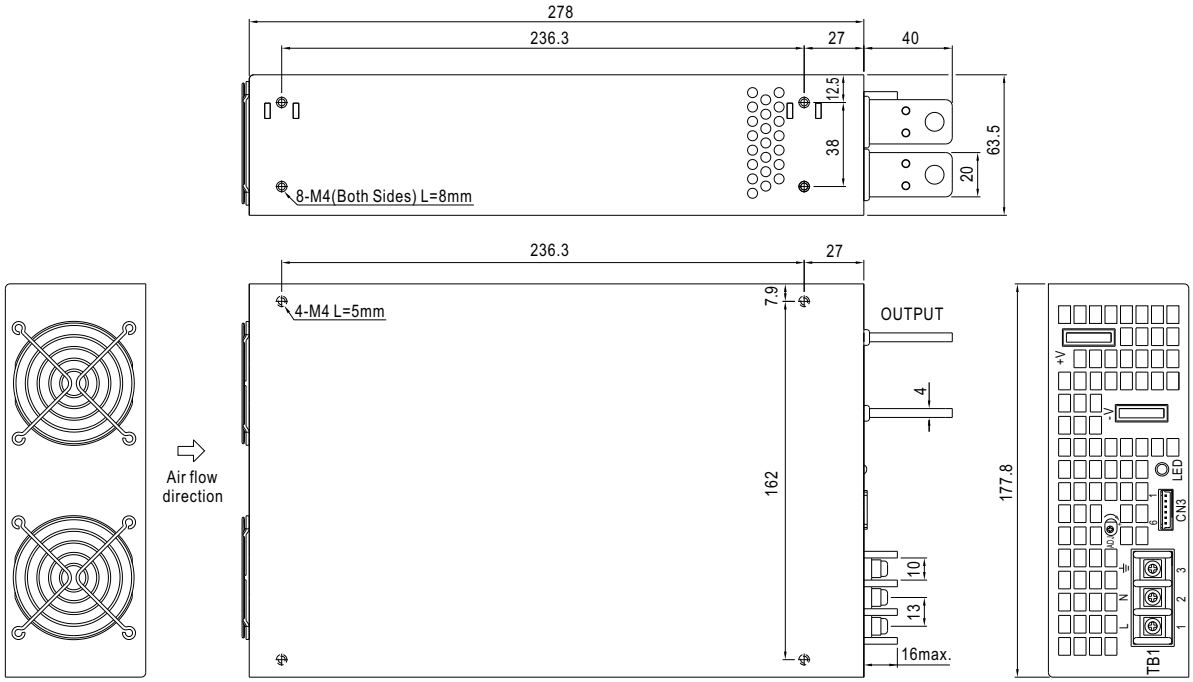

Terminal Pin No. Assignment :

Pin No.	Assignment
1	AC/L
2	AC/N
3	FG ⏚

Control Pin (CN3) : JST B6B-XH or equivalent

Pin No.	Assignment	Pin No.	Assignment	Mating Housing	Terminal
1	DC_OK Signal	4	+S	JST XHP or equivalent	JST SXH-001T or equivalent
2	DC_OK GND	5	RC-		
3	-S	6	RC+		

■ Block Diagram

fosc : 65KHz

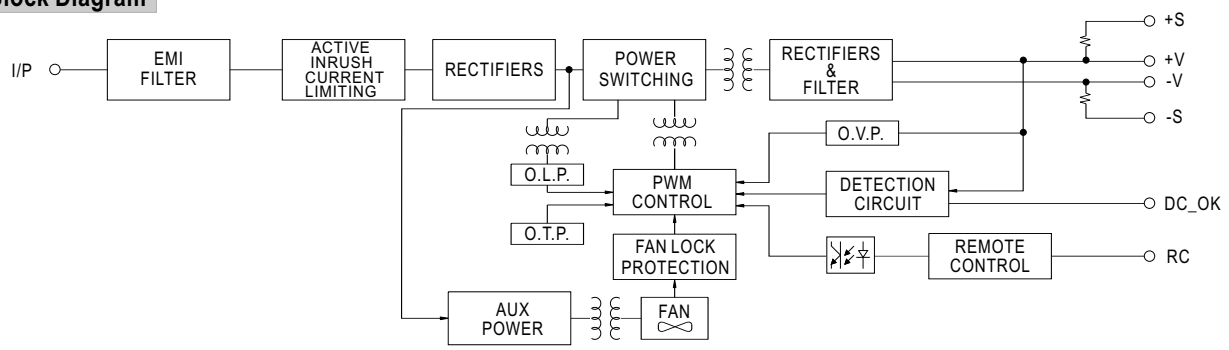

■ Derating Curve

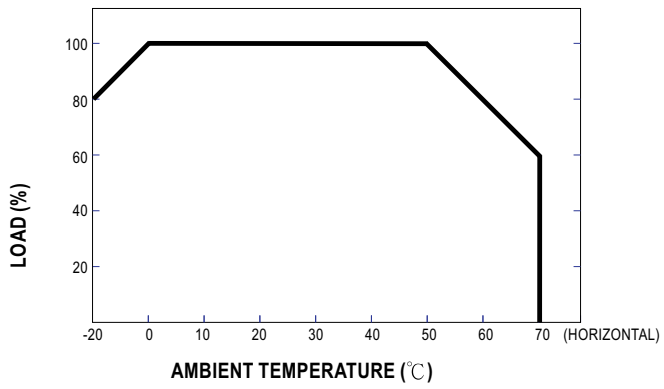

■ Static Characteristics

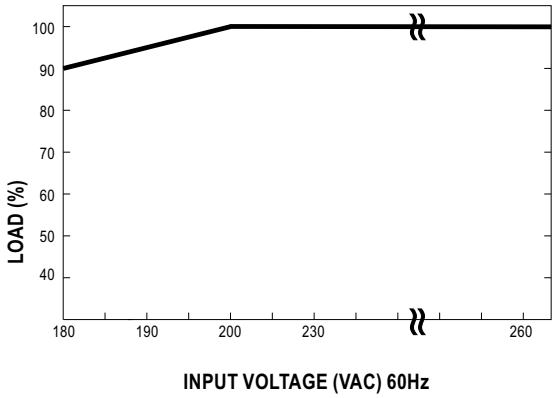

■ Function Description of CN3

Pin No.	Function	Description
1	DC_OK	DC_OK signal is a TTL level signal, referenced to pin2(DC_OK GND). High when PSU turns on.
2	GND	This pin connects to the negative terminal (-V). Return for DC_OK signal output.
3	-S	Negative sensing. The -S signal should be connected to the negative terminal of the load. The -S and +S leads should be twisted in pair to minimize noise pick-up effect.
4	+S	Positive sensing. The +S signal should be connected to the positive terminal of the load. The +S and -S leads should be twisted in pair to minimize noise pick-up effect.
5	RC-	Return for RC+ signal input.
6	RC+	Turns the output on and off by electrical or dry contact between pin 6 (RC+) and pin 5 (RC-). 0~0.8V: Power ON, 4~10V: Power OFF.

■ Function Manual

1.DC_OK Signal

DC_OK Signal is a TTL level signal. High when PSU turns on.

Between DC_OK(pin1) and GND(pin2)	Output Status
3.3 ~ 5.6V	ON
0 ~ 1V	OFF

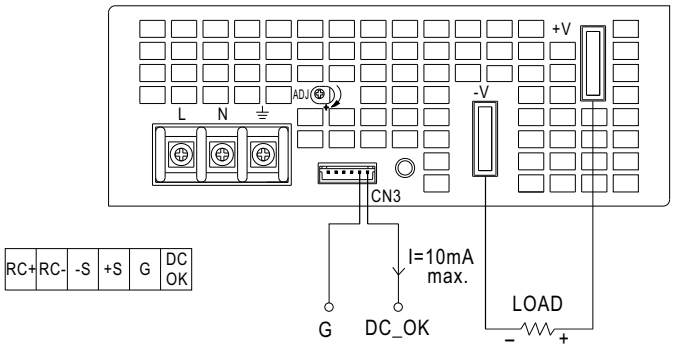

2. Remote Control

The PSU can be turned ON/OFF by using the "Remote Control" function.

Between RC+(pin6) and RC-(pin5)	Output Status
SW OFF (0 ~ 0.8V)	ON
SW ON (4 ~ 10V)	OFF

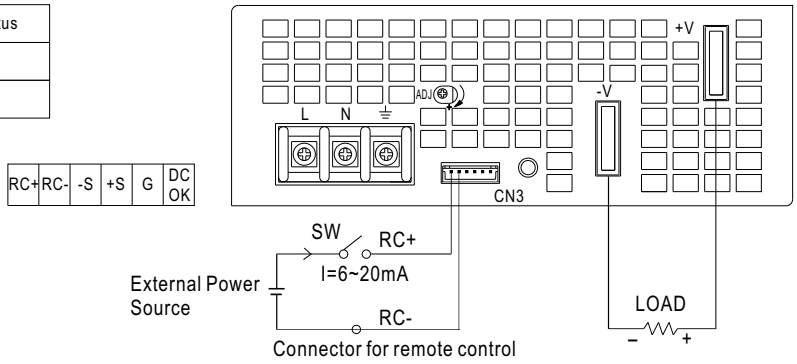

3. Remote Sense

