Technical Data *Green Products*

Data Sheet N0408, Rev. -

SDURF2020CT/CTR ULTRAFAST PLASTIC RECTIFIER

Applications:

- **Antiparallel diode for high frequency switching devices**
- **Anti saturation diode**
- **Snubber diode**
- **Free wheeling diode in converters and motor control circuits**
- **Rectifiers in switch mode power supplies (SMPS)**
- **Inductive heating and melting**
- **Uninterruptible power supplies (UPS)**
- **Ultrasonic cleaners and welders**

Features:

- **Fully Molded Isolation**
- **Dual Diodes-Cathode Common**
- **Ultra-Fast Recovery**
- **Low Forward Voltage Drop**
- **High Surge Capability**
- **200 Volts thru 600 Volts Types Available**
- **This is a Pb − Free Device**
- **All SMC parts are traceable to the wafer lot**
- **Additional testing can be offered upon request**

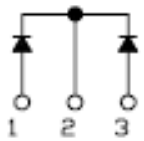

SDURF2020CT

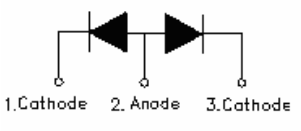

SDURF2020CTR

Mechanical Dimensions: In mm

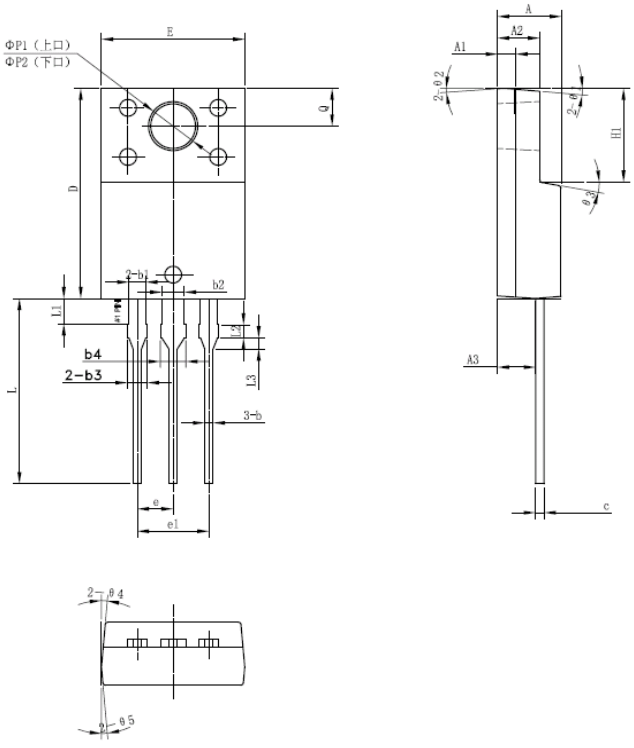

SYMBOL	MIN.	TYP.	MAX.
A	4.30	4.50	4.70
A1	1.10	1.30	1.50
A2	2.80	3.00	3.20
A3	2.50	2.70	2.90
b	0.50	0.60	0.75
b1	1.10	1.20	1.35
b2	1.50	1.60	1.75
b3	1.20	1.30	1.45
b4	1.60	1.70	1.85
c	0.55	0.60	0.75
D	14.80	15.00	15.20
E	9.96	10.16	10.36
e		2.55	
e1		5.10	
H1	6.50	6.70	6.90
L	12.70	13.20	13.70
L1	1.60	1.80	2.00
L2	0.80	1.00	1.20
L3	0.60	0.80	1.00
ΦP1(上口)	3.30	3.50	3.70
ΦP2(下口)	2.99	3.19	3.39
Q	2.50	2.70	2.90
Θ1		5°	
Θ2		4°	
Θ3		10°	
Θ4		5°	
Θ5		5°	

OPTION 1

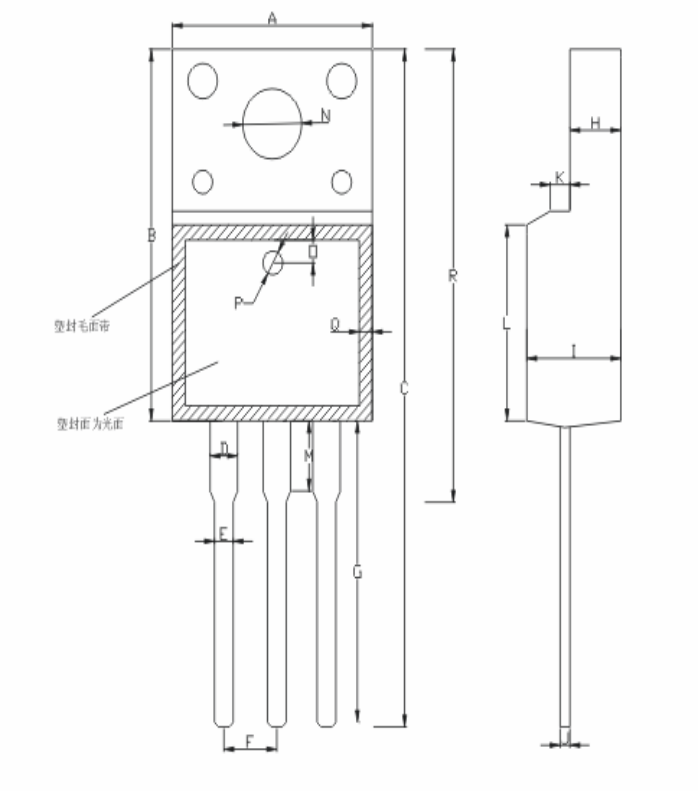

A:10.20 ±0.50	B:15.90 ±0.50	C:29.00 ±1.00	D:1.24 ±0.10
E:0.80 ±0.10	F:2.54 ±0.10	G:13.10 ±1,0	H:2.55 ±0.05
I:4.70 ±0.05	J:0.50 ±0.05	K:1.20 ±0.20	L:8.00 ±0.50
M:3.00 ±0.50	N:3.20 ±0.20	O:1,25 ±0.05	P:1.5 ±0.05
Q:1.0 ±0.20	R:19.2 ±1.0		

OPTION 2(SR)

ITO-220AB

Technical Data
Data Sheet N0408, Rev. -

Green Products

Marking Diagram:

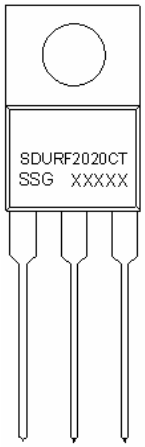

SDURF2020CT

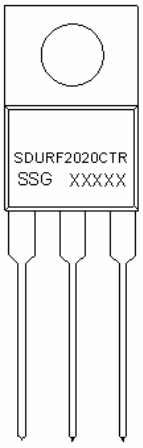

SDURF2020CTR

Where XXXXX is YYWWL

SDUR	= Device Type
F	= Package Type
20	= Forward Current (20A)
20	= Reverse Voltage (200V)
CT/CTR	= Configuration
SSG	= SSG
YY	= Year
WW	= Week
L	= Lot Number

Ordering Information:

Device	Package	Shipping
SDURF2020CT/CTR	ITO-220AB (Pb-Free)	50pcs / tube

For information on tape and reel specifications, including part orientation and tape sizes, please refer to our Tape and Reel Packaging Specification.

Maximum Ratings:

Characteristics	Symbol	Condition	Max.	Units
Peak Inverse Voltage	V_{RWM}	-	200	V
Average rectified forward current	$I_{F(AV)}$	50% duty cycle @Tc=100°C, rectangular wave form	20	A
Max. Peak One Cycle Non-Repetitive Surge Current	I_{FSM}	50Hz, Half Sine wave	125	A

Electrical Characteristics:

Characteristics	Symbol	Condition	Max.	Units
Max. Forward Voltage Drop (Per leg)	V_F	@ I_F= 10A, Pulse, T_J = 25℃	1.15	V
Max. Reverse Current	I_R	@V_R = rated V_R T_J = 25℃	15	μA
	I_R	@V_R = rated V_R T_J = 125℃	250	μA
Junction Capacitance	C_T	BAIS=5V，1MHZ	60	PF
Max. Reverse Recovery Time	t_{rr}	I_F=500mA, I_R=1A,and I_{rm}=250mA	35	ns

* Pulse width < 300 μs, duty cycle < 2%

Thermal-Mechanical Specifications:

Characteristics	Symbol	Condition	Specification	Units
Max. Junction Temperature	T_J	-	-55 to +150	℃
Max. Storage Temperature	T_{stg}	-	-55 to +150	℃
Maximum Thermal Resistance Junction to Case	$R_{\theta JC}$	DC operation	3.5	℃ /W
Maximum Thermal Resistance Junction to Ambient	$R_{\theta JA}$	DC operation	50	℃ /W
Approximate Weight	wt	-	2	g
Case Style	ITO-220AB			

Fugre1
Typical Forward Characteristics

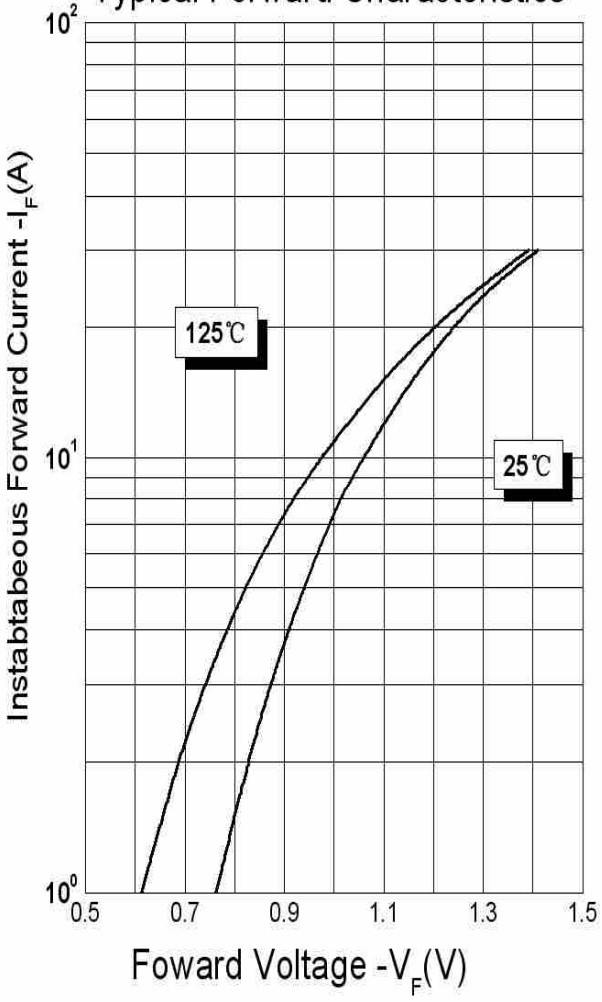

Figure 2
Typical Reverse Characteristics

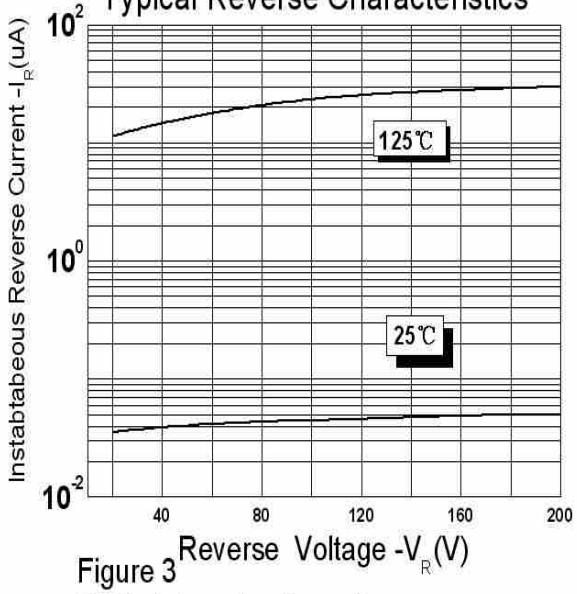

Figure 3
Typical Junction Capacitance

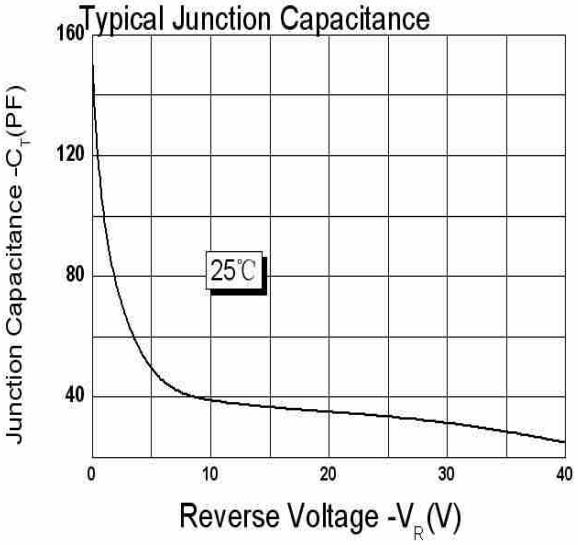

Technical Data *Green Products*

Data Sheet N0408, Rev. -

DISCLAIMER:

1- The information given herein, including the specifications and dimensions, is subject to change without prior notice to improve product characteristics. Before ordering, purchasers are advised to contact the SMC - Sangdest Microelectronics (Nanjing) Co., Ltd sales department for the latest version of the datasheet(s).

2- In cases where extremely high reliability is required (such as use in nuclear power control, aerospace and aviation, traffic equipment, medical equipment , and safety equipment) , safety should be ensured by using semiconductor devices that feature assured safety or by means of users' fail-safe precautions or other arrangement .

3- In no event shall SMC - Sangdest Microelectronics (Nanjing) Co., Ltd be liable for any damages that may result from an accident or any other cause during operation of the user's units according to the datasheet(s). SMC - Sangdest Microelectronics (Nanjing) Co., Ltd assumes no responsibility for any intellectual property claims or any other problems that may result from applications of information, products or circuits described in the datasheets.

4- In no event shall SMC - Sangdest Microelectronics (Nanjing) Co., Ltd be liable for any failure in a semiconductor device or any secondary damage resulting from use at a value exceeding the absolute maximum rating.

5- No license is granted by the datasheet(s) under any patents or other rights of any third party or SMC - Sangdest Microelectronics (Nanjing) Co., Ltd.

6- The datasheet(s) may not be reproduced or duplicated, in any form, in whole or part, without the expressed written permission of SMC - Sangdest Microelectronics (Nanjing) Co., Ltd.

7- The products (technologies) described in the datasheet(s) are not to be provided to any party whose purpose in their application will hinder maintenance of international peace and safety nor are they to be applied to that purpose by their direct purchasers or any third party. When exporting these products (technologies), the necessary procedures are to be taken in accordance with related laws and regulations..