SMD
POWER INDUCTORS

MODEL NO. : SDT-1204P SERIES (CDRH124B COMPATIBLE)

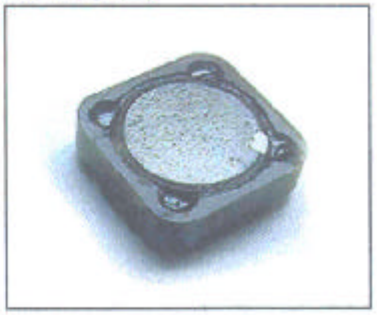

FEATURES:

* SUPERIOR QUALITY FOR AN AUTOMATED PRODUCTION LINE.
* PICK AND PLACE COMPATIBLE.
* TAPE AND REEL PACKING.

APPLICATION :

* NOTEBOOK COMPUTERS. * PDA. *ROGIC IC POWER SUPPLY

ELECTRICAL SPECIFICATION:

MODEL NO	INDUCTANCE (uH ± 30%) PRI	TURN RATIO PRI : SEC	RATED CURRENT (ADC)		DCR MAX (Ω)	
			PRI	SEC	PRI	SEC
SDT-1204P-9R0-121	9.0	1:2.1	3.6	0.20	0.040	0.45

NOTE(1):TEST FREQUENCY: 1 kHz,1 VRMS.

PHYSICAL DIMENSION(UNIT : mm)

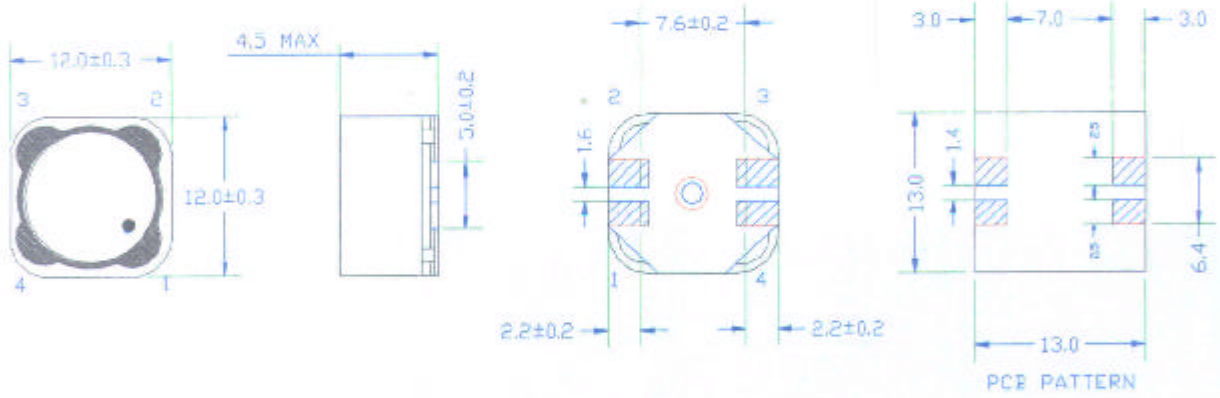

TEST CIRCUIT :

