Apacer

The Most **Reliable** Storage For Industries



SDM5A 7P/90D LP(H)



Apacer

SDM5A 7P/90D LP(H)

Overview





(Optional)

Apacer's SDM5A-M (SATA Disk Module 5A - M) is our next generation disk-on-module (DOM) series that offers elevated speed boost and higher error correction capabilities. Built with SATA 6 Gb/s interface, SDM5A-M delivers exceptional performance in data transfer. With its SATA interface compliance and compact size, this high-speed disk module defines an ideal balance of performance, capacities, reliability and cost. SDM5A-M comes in moderate capacities that are suitable to boot industrial applications and light operating systems for specific operations, while with some extra memory space for data storage. The architectural nature of SATA disk module provides higher resistance to external environmental influences and better flexibility for motherboard space. Regarding data reliability, SDM5A-M is built in with powerful ECC engine that can correct up to 40-bit per 1KB data. In addition, the controller unit of this DOM device supports wear-leveling, SMART and power failure management for data integrity. Wit its trustable reliability, performance and cost effectiveness, Apacer's SDM5A-M is definitely the ideal storage or cache solution for embedded and industrial computers, servers and thin clients.

Feature

- 7-pin SATA connector
- Unique Hook Design
- Power Cable-less Solution
- Perfect Solution for 1U System
- TRIM Command Support
- Product Housing Selection (Optional)
- Built-in ATA Secure Erase and S.M.A.R.T. Functions
- Global Wear-Leveling and Block Management

Apacer

Specifications

Model	SDM5A 7P/9D LP(H)
Interface	SATA 3.0 (6Gb/s)
Connector	7-pin
Form Factor	SATA Disk Module
NAND Flash Type	SLC
Capacity	Standard Type: 1GB~16GB High-speed Type: 8GB~32GB (in cable-less type only)
External DRAM	No
Sustained Read Performance (MB/sec)	Standard Type:Up to 34 High-speed Type:Up to 435
Sustained Write Performance (MB/sec)	Standard Type:Up to 55 High-speed Type:Up to 215
ECC Engine*	Built-in 40-bit per 1K bytes BCH ECC
Standard Operating Temperature (°C)	0 ~ + 70
Extended Operating Temperature (°C)	-40 ~ + 85
Storage Temperature (°C)	-40 ~ +100
Housing	Optional
H/W Write Protect	No
Screw Hole	No
Cable-less Solution	Optional (7+2 pin)
Shock	Operation: 50G, 11ms Non-operation: 1500G, 0.5ms
Vibration	Operation: 7.69 Grms, 20~2000 Hz/random (compliant with MIL-STD-810G) Non-operation: 4.02 Grms, 15 ~ 2000 Hz/sine (compliant with MIL-STD-810G)
Operating Voltage	5.0 V±5%
Power Consumption	Standard Type: Active mode: 165 mA & Idle mode: 65 mA High-speed Type: Active mode: 260 mA & Idle mode: 60 mA
Dimension (L x W x H)	Without housing: Standard type: 30.0 x 27.8 x 8.2 mm High-speed type: 30.0 x 27.8 x 7.4 mm With housing: 32.5 x 29.4 x 8.53 mm
MTBF (hours)	>2,000,000

Mechanical Specification(Housing is optional)

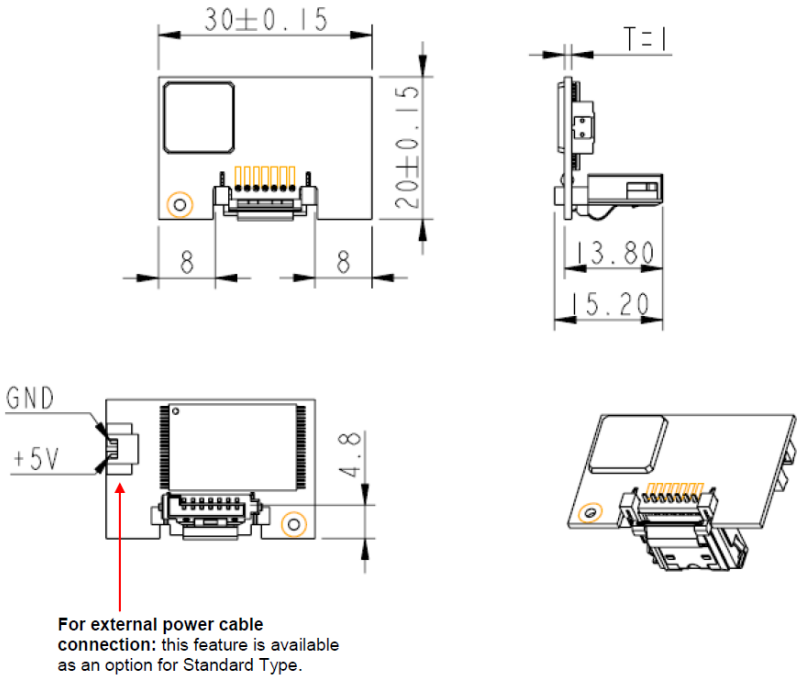

Unit: mm

(Optional)

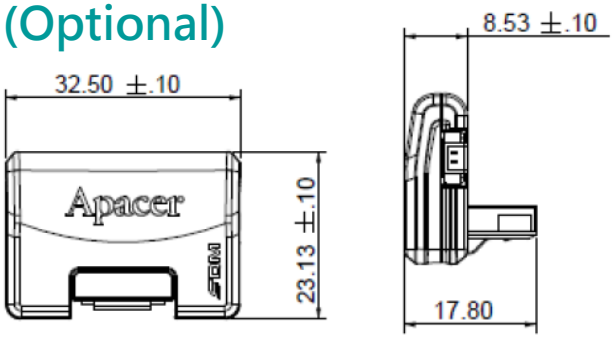

For more information, contact your Apacer representative

Global Presence

Taiwan (Headquarters)
Apacer Technology Inc.
Tel: +886-2-2267-8000
Fax: +886-2-2267-2261

Europe
Apacer Technology B.V.
Tel: +31-40-267-0000
Fax: +31-40-290-0686

U.S.A.
Apacer Memory America, Inc.
Tel: +1-408-518-8699
Fax: 1-510-249-9551

China
Apacer Electronic(Shanghai) Co., Ltd.
Tel: +86-21-6228-9939

Japan
Apacer Technology Corp.
Tel: +81-3-5419-2668
Fax: +81-3-5419-0018

India
Apacer Technologies Pvt. Ltd.
Tel: +91-80-41529061~3
Fax: +91-80-41700215

DOC:20161206