| DASH NO. | M CODE | MADE FROM |
|---|---|---|

SD

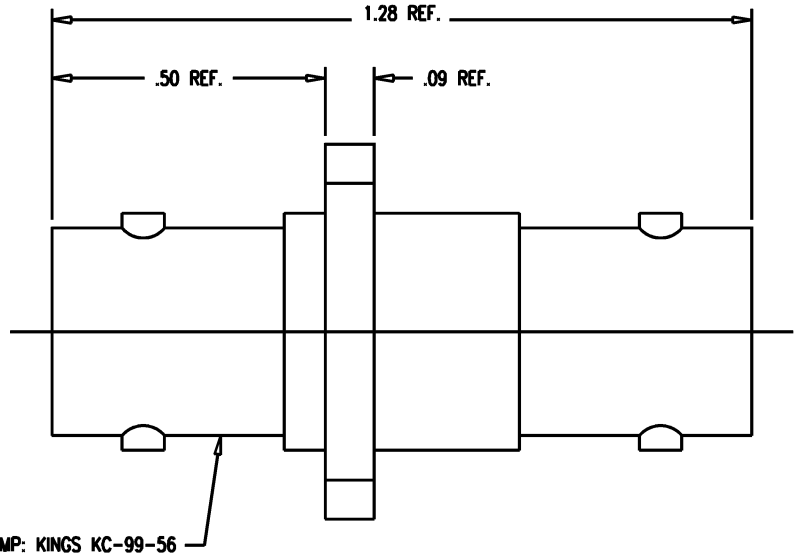


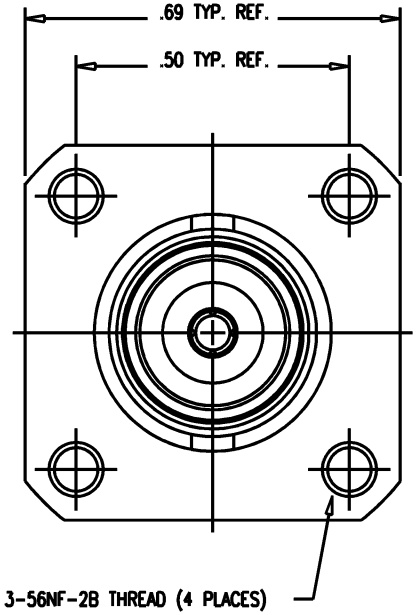


NOTES:
1. INTERFACES PER MIL-STD-348, FIG. 301.2.
2. MATERIAL:
   - INSULATORS: TEFLON, ASTM-D-4894
   - CENTER CONTACT: BER. COP., ASTM-B-196
   - ALL OTHER PARTS: BRASS, ASTM-B16
3. FINISHES:
   - CENTER CONACT: SILVER PLATE PER QQ-S-365
   - ALL OTHER METAL PARTS: KINGS TARNISH RESISTANT NICKEL FINISH (TR-5)
4. ELECTRICAL CHARACTERISTICS:
   - NOMINAL IMPEDANCE: 50 OHMS
   - VOLTAGE RATING: 500 VRMS
   - FREQUENCY RANGE: DC TO 4 GHz

SD

KC-99-56

| REVISIONS | |
|---|---|
| ISSUE | CHANGES |
| 4 | CN 37003 C<br>REDRAWN<br>KH 07/01/96 |
| 5 | CN 37429 C<br>MRM 08/18/97 |

KC9956C

SCALE 4:1

APPROX SURFACE AREA

USED ON

REF:

ADAPTER, F-F, PANEL, BNC

| | | | |
|---|---|---|---|
| DRAWN | KH | DATE | 07/01/96 |
| DESIGN | LI | DATE | 07/02/96 |
| APPR. | | DATE | |

KINGS
ELECTRONICS CO., INC.
TUCKAHOE, NEW YORK 10707

KC-99-56