DASH NO.	M CODE	MADE FROM

GSD

M39012/26-0101

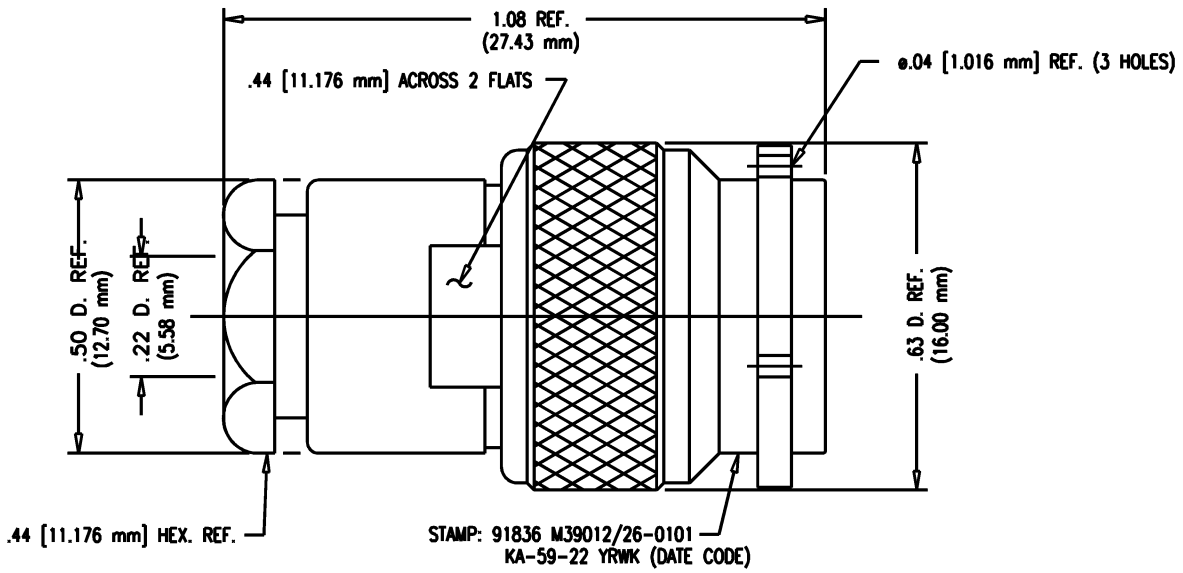

NOTES:
1. FOR USE RG-58, 142, 223, & 400/U CABLE.
2. FOR CABLING INSTRUCTIONS SEE 3-70.
3. INTERFACE PER MIL-STD-348, FIG. 313-1.
4. MATERIALS:
   - INSULATORS: TEFLON, ASTM-D4894
   - GASKETS: SIL. RUB., A-A-59588
   - C-RING: PHOS. BRONZE, ASTM-B135
   - OUTER CONTACT: BER. COP., ASTM-B196
   - ALL OTHER PARTS: BRASS, ASTM-B16
5. FINISHES:
   - CENTER CONTACT: HARD GOLD PLATE PER ASTM-B488
   - ALL OTHER METAL PARTS: SILVER PLATE PER ASTM-B700
6. ELECTRICAL CHARACTERISTICS:
   - NOMINAL IMPEDANCE: 50 OHMS
   - VOLTAGE RATING: 500 VRMS
   - FREQUENCY RANGE: DC TO 11 GHz

GSD

REVISIONS	
ISSUE	CHANGES
13	CN 32498 C KH 09/21/90
14	CN 38289 C REDRAWN TML 05/10/01
15	CN 38846 E BDH 05/09/03
16	CN 39708 C PMC 11/20/06
17	CN 39744 C HVN 01/02/07

KA-59-22 SD

SCALE	4:1
APPROX SURFACE AREA	
KA-59-22	
USED ON	
REF:	

PLUG, TNC

DRAWN	JHP	DATE	03/21/77
DESIGN		DATE	
APPR.	SAJ	DATE	04/14/71

KINGS
ELECTRONICS CO., INC.
ROCK HILL, SOUTH CAROLINA 29730

M39012/26-0101