General Description

The SDC277 is an integrated circuit which includes Hall sensor and output drive circuits. It's widely used in 2-phase brushless DC motor and Fan. It's composed of power reverse protection circuit, high stable voltage regulator, Hall voltage generator, a differential amplifier, Schmitt trigger and open collector output (DO, DOB).

In the case of power supply reverse connecting, the internal protection diode can protect IC but not protect coil, a protection diode can be added if necessary.

Features

- Wide operating voltage range: 3.5V~20V
- 250mA(AVG) output sink current
- Building-in protection diode
- Operating temperature range: -20°C~85°C
- Package: TO-94

Applications

- Brushless DC motor
- Brushless DC fan
- Revolution counting
- Speed measurement

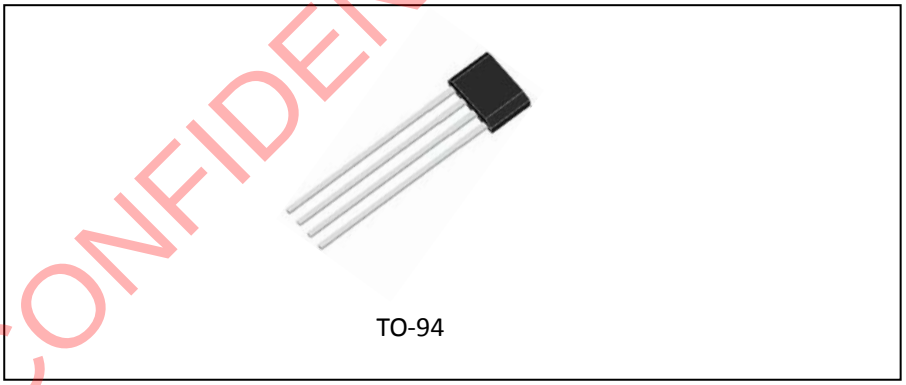

Figure 1. Package Type

SDC CONFIDENTIAL DOCUMENT

©2014 Shaoxing Devechip Microelectronics Co., Ltd.

Pin Configuration

Package: TO-94

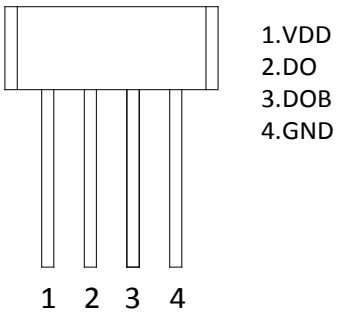

Figure 2. Pin Configuration

Pin Number	Pin Name	Function
1	VCC	Supply voltage pin
2	DO	Output 2 pin
3	DOB	Output 3 pin
4	GND	Ground pin

Table 1. Pin Description

Functional Block Diagram

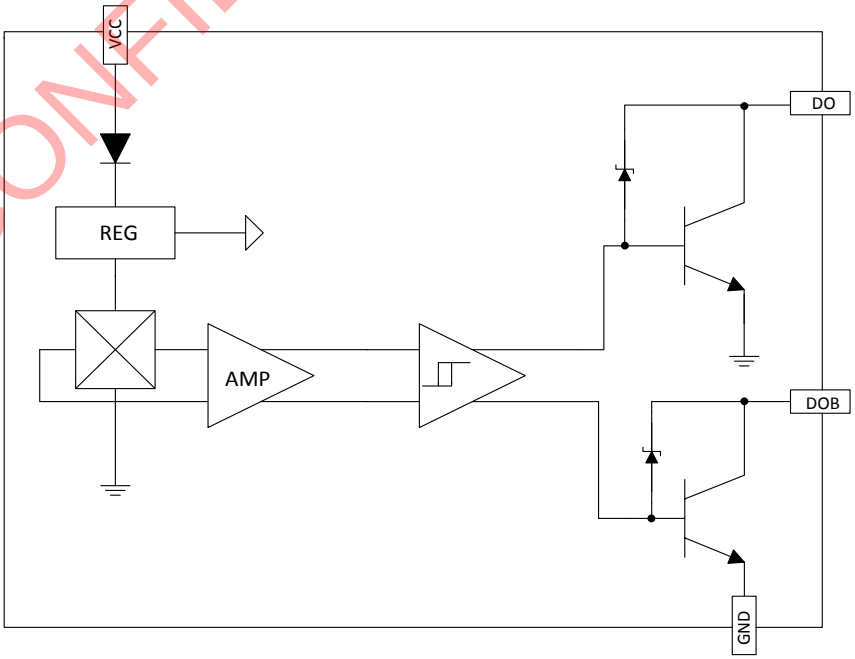

Figure 3. Functional Block Diagram

SDC CONFIDENTIAL DOCUMENT

©2014 Shaoxing Devechip Microelectronics Co., Ltd.

Ordering Information

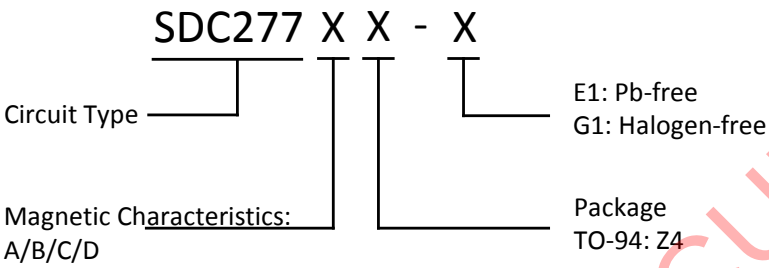

Package	Temperature Range	Part Number		Marking ID		Packing Type
		Pb-free	Halogen-free	Pb-free	Halogen-free	
TO-94	-20°C~85°C	SDC277AZ4-E1	SDC277AZ4-G1	277	277G	Bulk
		SDC277BZ4-E1	SDC277BZ4-G1	277	277G	Bulk
		SDC277CZ4-E1	SDC277CZ4-G1	277	277G	Bulk
		SDC277DZ4-E1	SDC277DZ4-G1	277	277G	Bulk

SDC CONFIDENTIAL DOCUMENT

©2014 Shaoxing Devechip Microelectronics Co., Ltd.

Absolute Maximum Ratings (Note: Stresses greater than those listed under absolute maximum ratings may cause permanent damage to the device.)

Parameter		Symbol	Value	Units
Supply Voltage		V_{CC}	24	V
Output Voltage		V_{OUT}	24	V
Reverse voltage		V_{RCC}	-20	V
Magnetic flux density		B	unlimited	GS
Output Current	Continuous	I_{OUT}	250	mA
	Hold		400	
	Peak		700	
Storage temperature range		T_S	-65 to 150	°C
Package power dissipation		P_D	550	mW
ESD, HBM model per Mil-Std-883, Method 3015		HBM	4000	V
ESD, MM model per JEDEC EIA/JESD22-A115		MM	400	V
Latch-up test per JEDEC 78		-	200	mA
Maximum junction temperature		T_J	150	°C

Table 2. Absolute Maximum Ratings

Recommended Operating Conditions

Parameter	Symbol	Min	Max	Unit
Power supply	V_{CC}	3.5	20	V
Operation temperature	Ta	-20	85	°C

Table 3 Recommended Operating Conditions

Electrical Characteristics (Ta=25°C, V_{CC}=12V, unless otherwise specified)

Parameter	Symbol	Conditions	Min	Typ	Max	Unit
Supply voltage	V_{CC}	-	3.5	-	20	V
Output zener breakdown	V_Z	-	-	46	-	V
Output saturation voltage	V_{SAT}	I_O=300mA	-	0.3	0.6	V
Output leakage current	I_{CEX}	V_{CC}=V_{CE}	-	0.1	10	uA
Supply current	I_{CC}	V_{CC}=20V, output open	-	12	16	mA
Output rise time	t_r	R_L=820Ω, C_L=20pF	-	3.0	10	us
Output falling time	t_f	R_L=820Ω, C_L=20pF	-	0.3	1.5	us
Switch time differential	Δt	R_L=820Ω, C_L=20pF	-	3.0	10	us

Table 4. Electrical Characteristics

SDC CONFIDENTIAL DOCUMENT

©2014 Shaoxing Devechip Microelectronics Co., Ltd.

Magnetic Characteristics (Ta=25°C,V_{CC}=12V, unless otherwise specified)

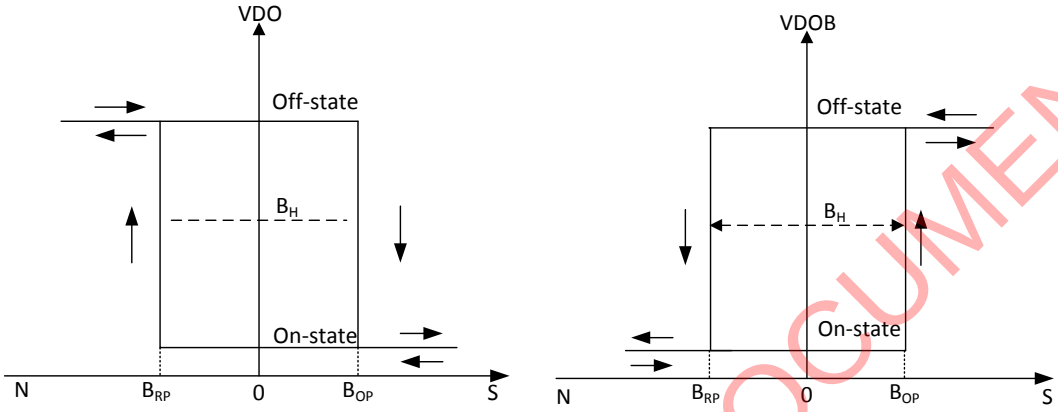

Figure 4. Magnetic Characteristics

Grade A

Parameter	Symbol	Min	Max	Unit
Operate point	B_{OP}	20	50	GS
Release point	B_{RP}	-50	-20	GS

Grade B

Parameter	Symbol	Min	Max	Unit
Operate point	B_{OP}	10	70	GS
Release point	B_{RP}	-70	-10	GS

Grade C

Parameter	Symbol	Min	Max	Unit
Operate point	B_{OP}	-	90	GS
Release point	B_{RP}	-90	-	GS

Grade D

Parameter	Symbol	Min	Max	Unit
Operate point	B_{OP}	-	125	GS
Release point	B_{RP}	-125	-	GS

SDC CONFIDENTIAL DOCUMENT

©2014 Shaoxing Devechip Microelectronics Co., Ltd.

Typical Performance Characteristics

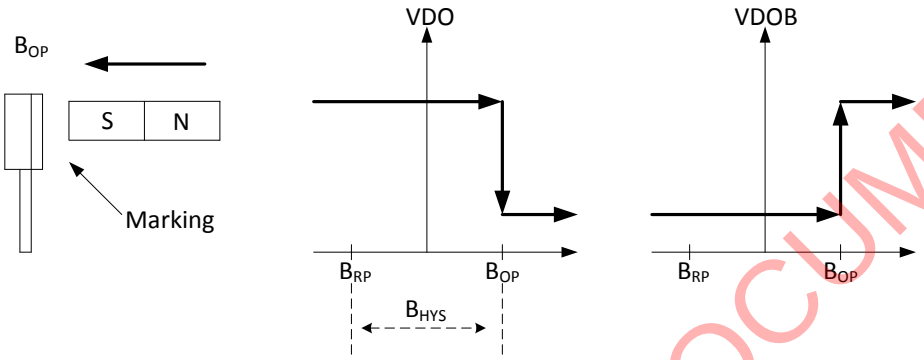

Figure 5. Magnetic Characteristics

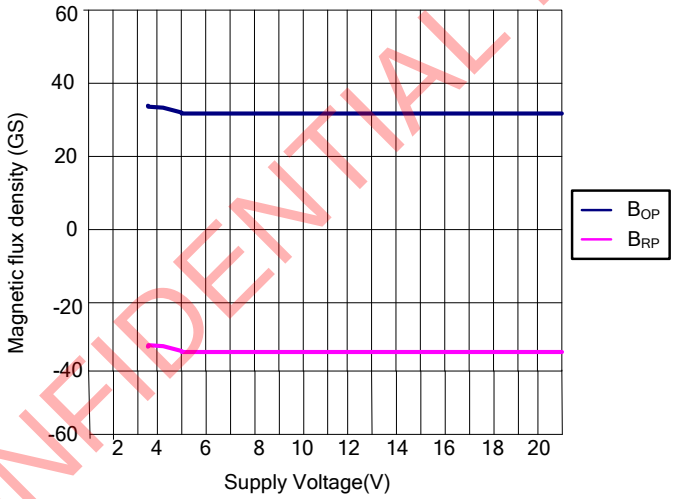

Figure 6. Typical Magnetic Switch Point vs. Supply Voltage

Typical Application

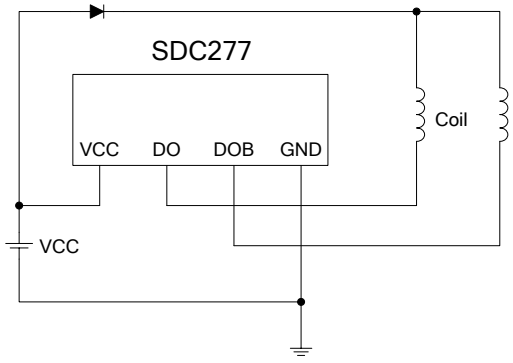

Figure 7. Typical Application

SDC CONFIDENTIAL DOCUMENT

©2014 Shaoxing Devechip Microelectronics Co., Ltd.

Package Dimension

TO-94

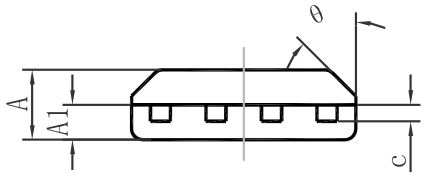

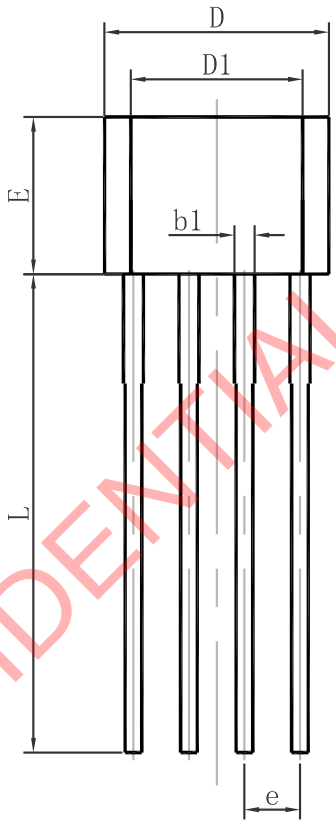

Symbol	Dimensions In Millimeters		Dimensions In Inches	
	Min	Max	Min	Max
A	1.400	1.800	0.055	0.071
A1	0.700	0.900	0.028	0.035
b1	0.380	0.550	0.015	0.022
C	0.360	0.510	0.014	0.020
D	5.050	5.350	0.202	0.214
D1	4.550	4.850	0.128	0.194
E	3.450	3.750	0.136	0.148
e	1.270 TYP.		0.050 TYP.	
L	14.300	14.700	0.572	0.588
θ	10°TYP.		10°TYP.	

SDC CONFIDENTIAL DOCUMENT

©2014 Shaoxing Devechip Microelectronics Co., Ltd.

SDC CONFIDENTIAL DOCUMENT

Shaoxing Devechip Microelectronics Co., Ltd.

http://www.sdc-semi.com/

IMPORTANT NOTICE

Information in this document is provided solely in connection with Shaoxing Devechip Microelectronics Co., Ltd. (abbr. SDC) products. SDC reserves the right to make changes, corrections, modifications or improvements, to this document, and the products and services described herein at anytime, without notice. SDC does not assume any responsibility for use of any its products for any particular purpose, nor does SDC assume any liability arising out of the application or use of any its products or circuits. SDC does not convey any license under its patent rights or other rights nor the rights of others.

© 2014 Devechip Microelectronics - All rights reserved

Contact us:

Headquarters of Shaoxing

Address: Tian Mu Road, No13,

Shaoxing city, Zhejiang province, China

Zip code: 312000

Tel: (86) 0575-8861 6750

Fax: (86) 0575-8862 2882

Shenzhen Branch

Address: 22A, Shangbu building, Nan Yuan Road, No.68,

Futian District, Shenzhen city, Guangdong province, China

Zip code: 518031

Tel: (86) 0755-8366 1155

Fax: (86) 0755-8301 8528