SMD POWER INDUCTORS

SDC0703 SERIES

1. PART NO. EXPRESSION :

S D C 0 7 0 3 - 1 0 1 M F

(a) (b) (c) (d)(e)

(a) Series code

(b) Dimension code

(c) Inductance code : 101 = 100uH

(d) Tolerance code : M = ±20%

(e) F : Lead Free

2. CONFIGURATION & DIMENSIONS :

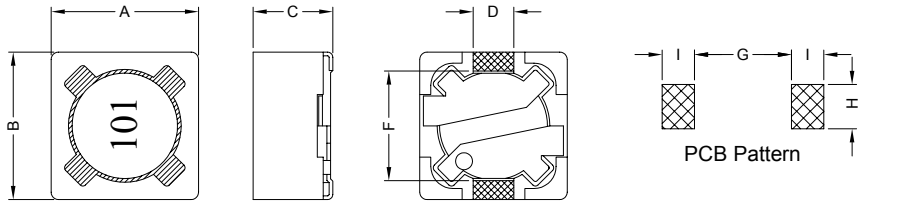

Unit:m/m

A	B	C	D	F	G	H	I
7.30±0.20	7.30±0.20	3.40 Max.	1.80 Ref.	5.00 Ref.	4.8 Ref.	2.2 Ref.	1.6 Ref.

3. SCHEMATIC :

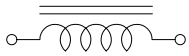

4. MATERIALS :

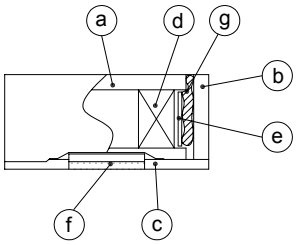

(a) Core : DR Ferrite Core

(b) Core : RI Ferrite Core

(c) Base : LCP

(d) Wire : Enamelled Copper Wire

(e) Tape : Mylar Tape

(f) Terminal : Tinned Copper Plate

(g) Adhesive : Epoxy

5. GENERAL SPECIFICATION :

a) Temp. rise : 40°C Max.

b) Rated current : Base on temp. rise & ΔL/L0A = 25% Max.

c) Operating temp. : -20°C to +80°C

RoHS Compliant

NOTE : Specifications subject to change without notice. Please check our website for latest information.

6. ELECTRICAL CHARACTERISTICS :

Part No.	Inductance (μH)	Test Frequency	RDC (Ω) Max.	IDC (A) Max.
SDC0703-100MF	10 ±20%	1KHz / 0.25V	0.072	1.68
SDC0703-120MF	12 ±20%	1KHz / 0.25V	0.098	1.52
SDC0703-150MF	15 ±20%	1KHz / 0.25V	0.130	1.33
SDC0703-180MF	18 ±20%	1KHz / 0.25V	0.140	1.20
SDC0703-220MF	22 ±20%	1KHz / 0.25V	0.190	1.07
SDC0703-270MF	27 ±20%	1KHz / 0.25V	0.210	0.96
SDC0703-330MF	33 ±20%	1KHz / 0.25V	0.240	0.91
SDC0703-390MF	39 ±20%	1KHz / 0.25V	0.320	0.77
SDC0703-470MF	47 ±20%	1KHz / 0.25V	0.360	0.76
SDC0703-560MF	56 ±20%	1KHz / 0.25V	0.470	0.68
SDC0703-680MF	68 ±20%	1KHz / 0.25V	0.520	0.61
SDC0703-820MF	82 ±20%	1KHz / 0.25V	0.690	0.57
SDC0703-101MF	100 ±20%	1KHz / 0.25V	0.790	0.50
SDC0703-121MF	120 ±20%	1KHz / 0.25V	0.890	0.49
SDC0703-151MF	150 ±20%	1KHz / 0.25V	1.270	0.43
SDC0703-181MF	180 ±20%	1KHz / 0.25V	1.450	0.39
SDC0703-221MF	220 ±20%	1KHz / 0.25V	1.650	0.35
SDC0703-271MF	270 ±20%	1KHz / 0.25V	2.310	0.32
SDC0703-331MF	330 ±20%	1KHz / 0.25V	2.620	0.28
SDC0703-391MF	390 ±20%	1KHz / 0.25V	2.940	0.26
SDC0703-471MF	470 ±20%	1KHz / 0.25V	4.180	0.24
SDC0703-561MF	560 ±20%	1KHz / 0.25V	4.670	0.22
SDC0703-681MF	680 ±20%	1KHz / 0.25V	5.730	0.19
SDC0703-821MF	820 ±20%	1KHz / 0.25V	6.540	0.18
SDC0703-102MF	1000 ±20%	1KHz / 0.25V	9.440	0.16

RoHS Compliant

NOTE : Specifications subject to change without notice. Please check our website for latest information.

7. PACKAGING INFORMATION : (Unit : mm)

7-1. Reel & Tape Dimension

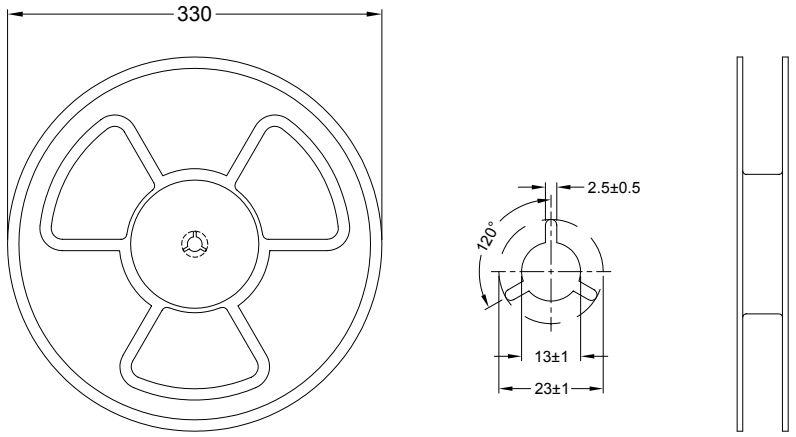

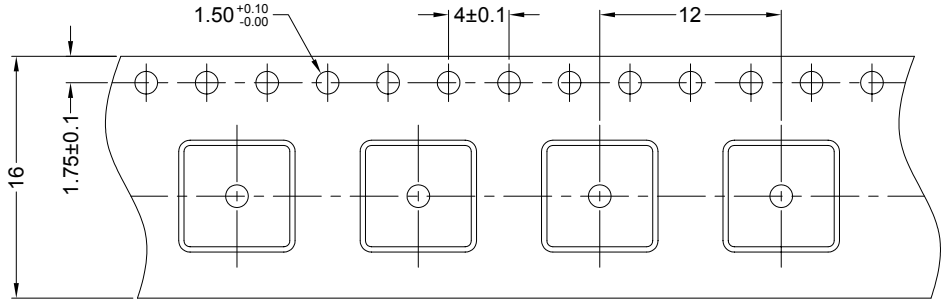

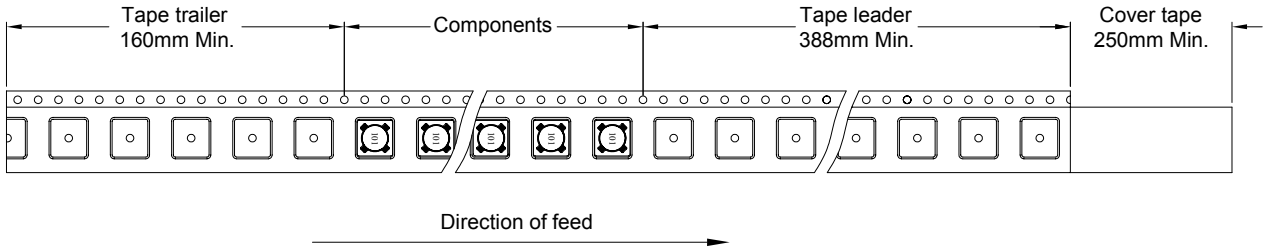

7-2. Quantity & G.W. per package

SERIES	INNER : REEL			OUTER : CARTON		
	Q'TY (PCS)	G.W. (Kg)	STYLE	Q'TY (PCS)	G.W. (Kg)	SIZE (cm)
SDC0703	1000	1.0	13-16	16000	20	36 x 36 x 40

RoHS Compliant

NOTE : Specifications subject to change without notice. Please check our website for latest information.

7-3. Tearing Off Force

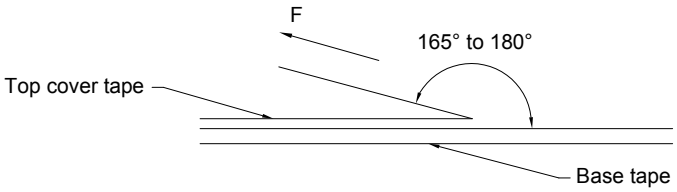

The force for tearing off cover tape is 10 to 60 grams in the arrow direction.

RoHS Compliant

NOTE : Specifications subject to change without notice. Please check our website for latest information.