DASH NO.	M CODE	MADE FROM

GSD

7702-2

REVISIONS	
ISSUE	CHANGES
0	ER 35428 KH 04/13/95
1	CN 39531 C AM 07/12/06
2	CN 39576 E AM 08/16/06

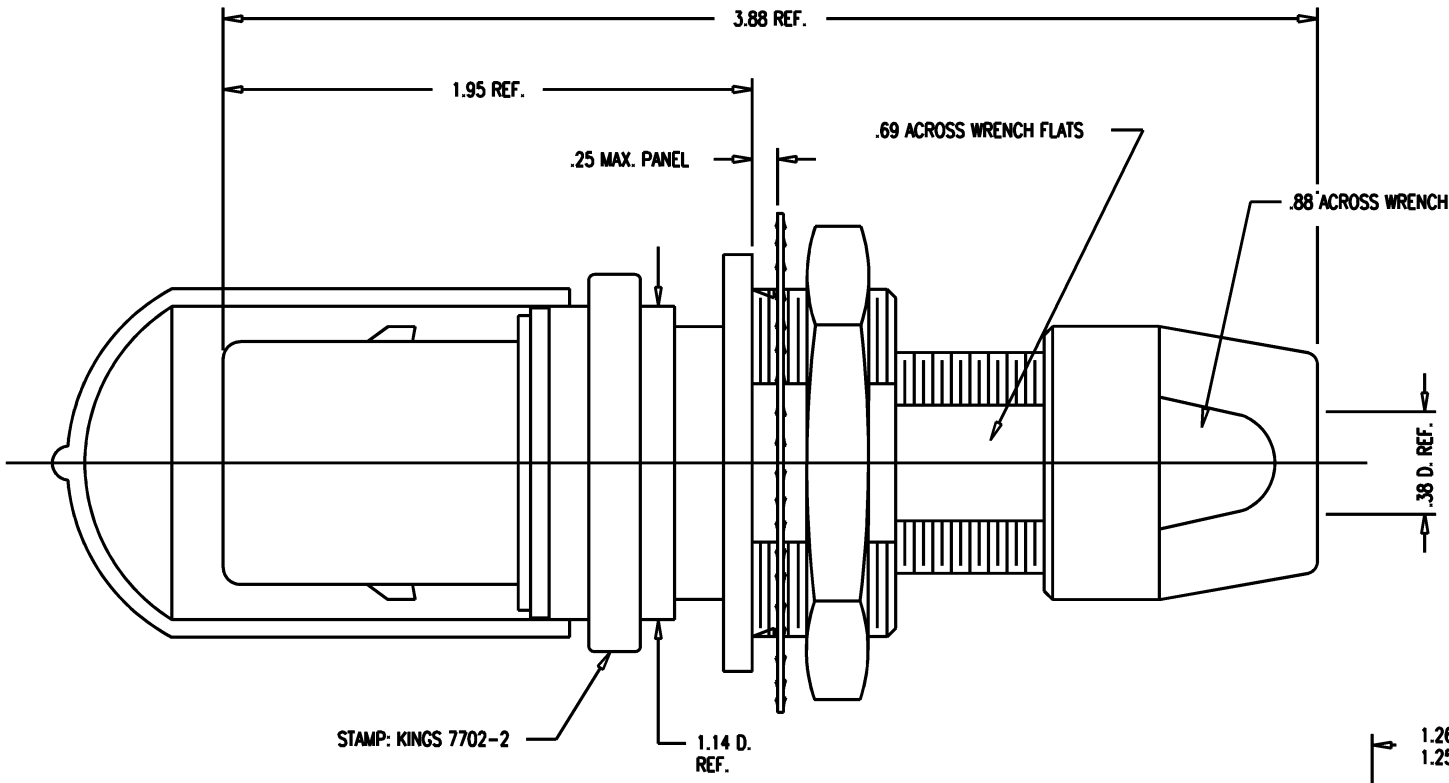

NOTES:
1. FOR USE WITH 730 CABLE GROUPS.
2. FOR CABLING INSTRUCTIONS SEE KAI-8010.
3. FOR CABLE TRIMMING USE KTJ-303 AND KTD-303.
4. FOR CRIMPING USE DIE KTH-2002.
5. MATERIALS:
   - INSULATORS-TEFLON, ASTM-D-4894
   - LOCKWASHER-SPRING STEEL, PER ASTM A682
   - CONDUCTIVE GASKET-CONSIL C 87-10004, 60-70 DUROMETER
   - GASKETS-SILICONE RUBBER, ZZ-R-765
   - CAP-VINYL
   - K-GRIP SLEEVE-COMMERCIAL BRONZE, ASTM-B-135
   - OUTER CONTACT-PHOSPHOR BRONZE, ASTM-B-103
   - BODY-BER. COP., ASTM-B-196
   - ALL OTHER METAL PARTS-BRASS, ASTM-B16
6. FINISHES:
   - CENTER CONTACT-GOLD PLATE PER MIL-G-45204
   - LOCKWASHER, NUTS, COLLET, OUTER BODIES, BODY RING: KINGS TARNISH RESISTANT NICKEL FINISH (TR-5)
   - ALL OTHER METAL PARTS-SILVER PLATE PER QQ-S-365
7. ELECTRICAL CHARACTERISTICS:
   - NOMINAL IMPEDANCE: 75 OHMS
   - FREQUENCY RANGE: DC-500 MHZ
   - VOLTAGE BREAKDOWN: CENTER CONDUCTOR/INNER GROUND: 1500 VRMS
     INNER GROUND/OUTER GROUND: 500 VRMS

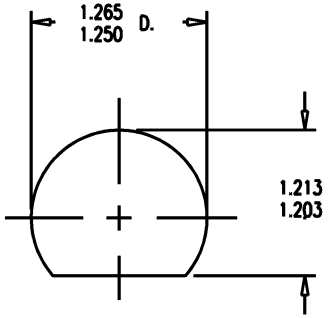

MOUNTING HOLE

GSD

SCALE 2:1

APPROX SURFACE AREA

USED ON

REF: KP-8012-737-400

PLUG, BULKHEAD, TRI-LOC
SERIAL DIGITAL

DRAWN	KH	04/13/95
DESIGN	DW	06/17/95
APPR.		DATE

KINGS
ELECTRONICS CO., INC.
ROCK HILL, SOUTH CAROLINA 29730

7702-2