DWG. NO. SD450-060-0046J

REV	DESCRIPTION	BY DATE	APPD
A	RELEASED PER ECR 7773	JED 7/15/03	JEM

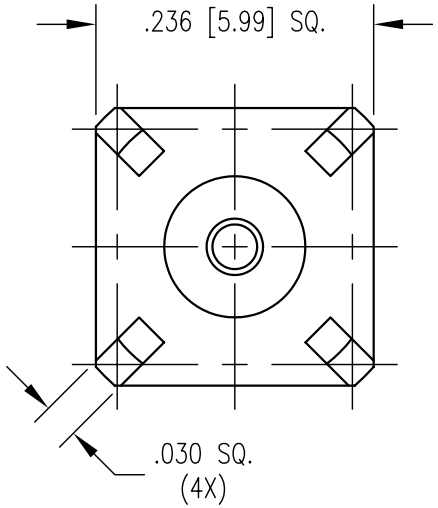

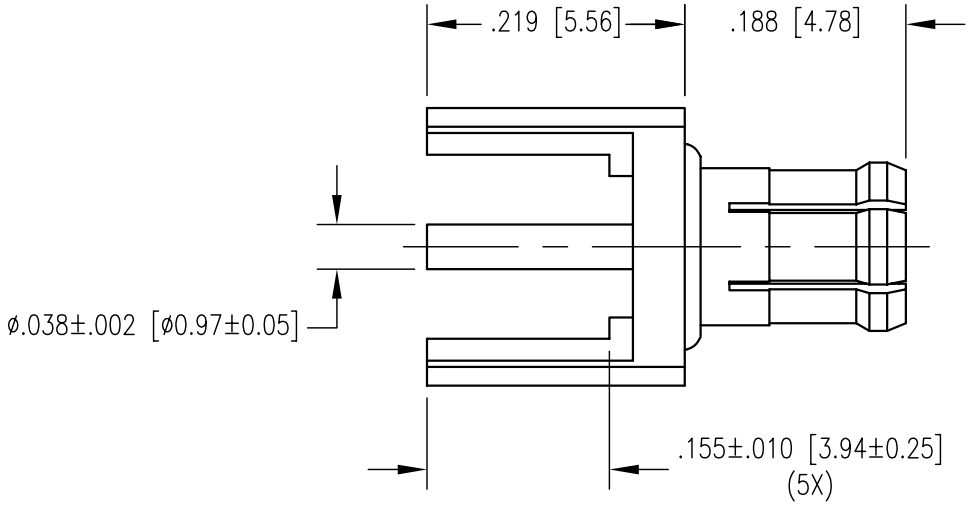

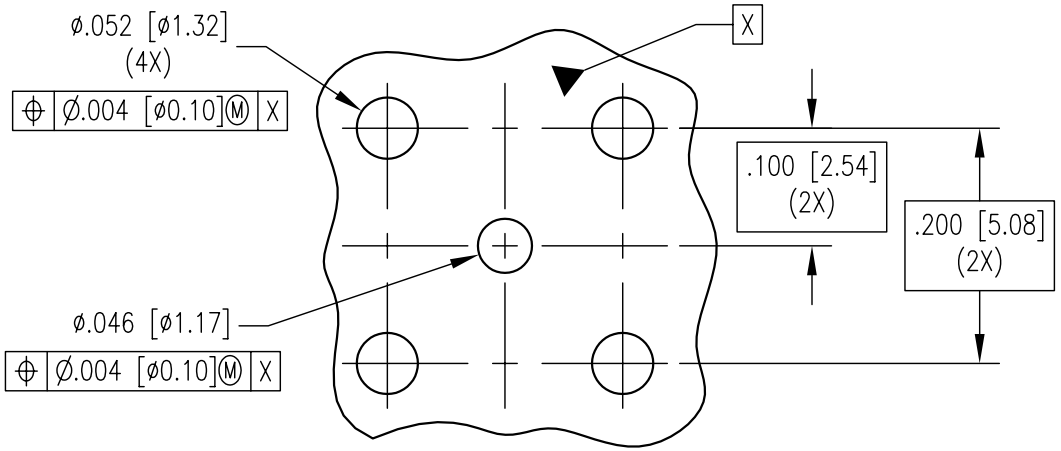

RECOMMENDED PCB HOLE PATTERN

NOTES:

1. MATERIALS:
   OUTER CONTACT: BERYLLIUM COPPER PER ASTM B196
   BODY AND CENTER CONTACT: BRASS PER ASTM B16
   INSULATOR: TEFLON PER ASTM D1710
2. FINISH:
   BODY AND OUTER CONTACT: .000015 MIN. GOLD PER MIL-G-45204 OVER
   .000100 MIN. COPPER PER MIL-C-14550
   CENTER CONTACT: .000030 MIN. GOLD PER MIL-G-45204 OVER
   .000100 MIN. COPPER PER MIL-C-14550
3. THIS CONNECTOR CONFORMS TO THE REQUIREMENTS LISTED IN CECC 22 220.

PER ASME Y14.5M-1994
UNLESS OTHERWISE SPECIFIED:
DIMENSIONS ARE IN INCHES [MM]
TOLERANCES:
DECIMALS .XX ± .01 [0.254]
.XXX ± .005 [0.127]
ANGLES ± 2° SCALE: 6:1

CUSTOMER DRAWING

DRAWN	DATE	CHECKED	DATE
JED	6/19/03	CWB	6/20/03
APPROVED	DATE	APPROVED	DATE
JEM	6/20/03	MG	6/20/03

NORTHROP GRUMMAN

Winchester Electronics 62 Barnes Industrial Road North Wallingford, CT 06492

TITLE: MCX STRAIGHT PCB MOUNT JACK

A	SD450-060-0046J	SHT. 1 OF 1	REV. A

June 2006 - This drawing became the property of Winchester Electronics Corporation, Wallingford, CT.