High-Speed Analog N-Channel/Enhancement-Mode DMOS FETS

SD400 / SD402

FEATURES

- **Fast switching . . . . . t_{on} <1ns**
- **Low capacitance . . . . . C_{rss} 0.3 pF (typ)**
- **Low threshold . . . . . <1.5V max**
- **CMOS and TTL Compatible Input**

APPLICATIONS

- **Switch Drivers**
- **Video Switches**
- **Active Pullups**
- **VHF/UHF Amplifiers**

DESCRIPTION

The SD400 and SD402 are N-Channel Enhancement Mode devices processed utilizing Calogic's proprietary high speed, low capacitance lateral DMOS technology. These devices are excellent switch drivers where low threshold offers the designer the advantage of CMOS and TTL compatibility with ultra high switching speeds.

ORDERING INFORMATION

Part	Package	Temperature Range
SD400BD	Plastic TO-92	-55°C to +125°C
SD402BD	Plastic TO-92	-55°C to +125°C
XSD400	Sorted Chips in Carriers	-55°C to +125°C
XSD402	Sorted Chips in Carriers	-55°C to +125°C

PIN CONFIGURATION

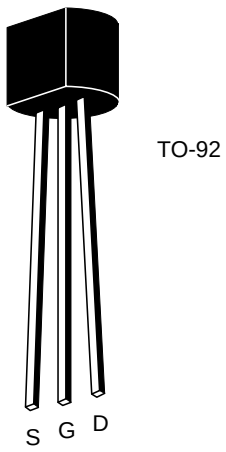

CD1-1

SCHEMATIC DIAGRAM

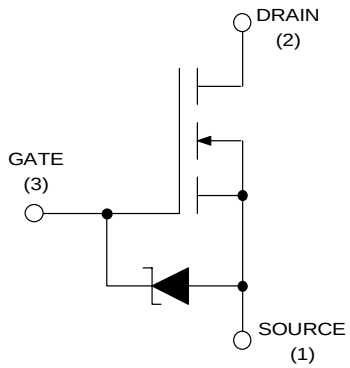

ABSOLUTE MAXIMUM RATINGS (T_C = +25°C unless otherwise noted)

V_{DS} Drain-Source Voltage
SD400 . . . . . +30V
SD402 . . . . . +15V
V_{GS} Gate-Source Voltage . . . . . -0.3 V
+20 V
V_{DG} Gate-Drain Voltage . . . . . -0.3 V
+20 V

V_{SD} Source-Drain Voltage . . . . . -0.3 V
I_D Continuous Drain Current . . . . . 50 mA
Power Dissipation (at or below T_C = +25°C) . . 300mW
Linear Derating Factor . . . . . 3.0 mW/ °C
Operating Storage and
Junction Temperature Range . . . . . -55°C to +125°C

ELECTRICAL CHARACTERISTICS (T_A = +25°C unless otherwise noted)

SYMBOL	CHARACTERISTICS	SD400			SD402			UNIT	TEST CONDITIONS
		MIN	TYP	MAX	MIN	TYP	MAX		
STATIC									
BV_{DSS}	Drain-Source Breakdown Voltage	30	35		15	25		V	I_D = 1.0µA, V_{GS} = 0
$I_{D(OFF)}$	Drain-Source OFF Leakage Current			1.0			1.0	µA	V_{DS} = 15 V, V_{GS} = 0
I_{GSS}	Gate-Source Leakage Current			1.0			1.0	µA	V_{GS} = 20 V, V_{DS} = 0
$I_{D(ON)}$	Drain-Source ON Current	50	100		50	100		mA	V_{DS} = 10 V, V_{GS} = 10 V Pulse Test
$V_{GS(th)}$	Gate-Source Threshold Voltage	0.7		1.5	0.7		1.5	V	I_D = 1.0 µA, V_{DS} = V_{GS}
$V_{DS(ON)}$	Drain-Source ON Voltage		150	250		150	250	mV	I_D = 1 mA, V_{GS} = 2.4 V
$r_{DS(ON)}$	Drain-Source ON Resistance		150	250		150	250	ohms	
$V_{DS(ON)}$	Drain-Source ON Voltage		60	80		60	80	mV	I_D = 1 mA, V_{GS} = 4.5 V
$r_{DS(ON)}$	Drain-Source ON Resistance		60	80		60	80	ohms	
DYNAMIC									
g_{fs}	Common-Source Forward Transconductance	8.0	12		8.0	12		mS	I_D = 20 mA, V_{DS} = 10 V f = 1 KHz Pulse Test
c_{iss}	Common-Source Input Capacitance		4.0	5.0		4.0	5.0	pF	V_{DS} = 10 V, V_{GS} = 0 f = 1 MHz
c_{oss}	Common-Source Output Capacitance		1.8	2.5		1.8	2.5		
c_{rss}	Common-Source Reverse Transfer Capacitance		0.3	0.5		0.3	0.5		
$t_{d(ON)}$	Turn ON Delay Time		0.7	1.0		0.7	1.0	ns	V_{DD} = 10 V, R_L = 680 $V_{G(ON)}$ = 10 V, R_G = 51 C_L = 1.5 pF
t_r	Rise Time		0.8	1.0		0.8	1.0		
$t_{(OFF)}$	Turn OFF Time		12			12			