SD3GDAIII User's Guide

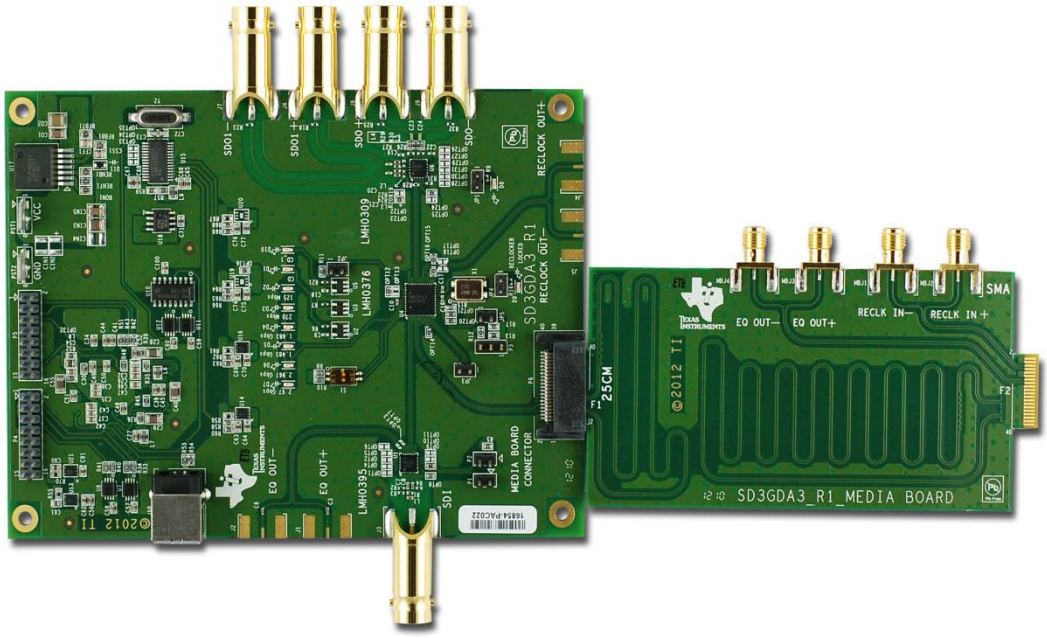

9/20/2012

Contents

1 INTRODUCTION 1

2 SETUP 2

2.1 Software Installation 2

2.2 Connecting the Evaluation Board 3

2.3 Jumper and Option Settings 4

3 RUNNING THE GUI 5

3.1 Overview 5

3.2 Direct Read/Write to registers 5

3.3 Equalizer Control Page 6

3.4 Reclocker Control Page 7

3.5 Eye Monitor Page 8

4 MEDIA CARD 8

5 BOARD SCHEMATICS 9

5.1 Equalizer Section 9

5.2 Reclocker Section 10

5.3 Cable Driver 11

5.4 USB Interface 12

5.5 Power 13

5.6 Media Board 14

6 BOARD LAYOUT 15

6.1 Top Layer 15

6.2 GND-1 Layer 16

6.3 GND-2 Layer 17

6.4 Sig-1 Layer 18

6.5 GND-3 Layer 19

6.6 Vcc Layer 20

6.7 GND-4 Layer 21

6.8 Bottom Layer 22

7 BILL OF MATERIALS 23

8 EVALUATION BOARD/KIT/MODULE (EVM) ADDITIONAL TERMS 25

Figures

Figure 1 SD3GDAIII EVM Block Diagram 1
Figure 2 Equalizer Section Schematic 9
Figure 3 Reclocker Section Schematic 10
Figure 4 Cable Driver Section Schematic 11
Figure 5 USB Interface Section Schematic 12
Figure 6 Power Management Section Schematic 13
Figure 7 Media Board Schematic 14

SD3GDAIII User's Guide

1 Introduction

The SD3GDAIII is a kit containing an evaluation board which is functionally an SDI Distribution Amplifier with a serial interface to allow connection to a host computer and a graphical user interface (GUI) program which allows the configuration of the devices on the board to be changed as desired, and allows for some measurements to be made on the board.

2 Setup

2.1 Software Installation

A copy of the install program can be obtained either from the CD encosed with the kit or downloaded from http://www.ti.com/tool/sd3gdaiii. This installer will run and give you this initial window:

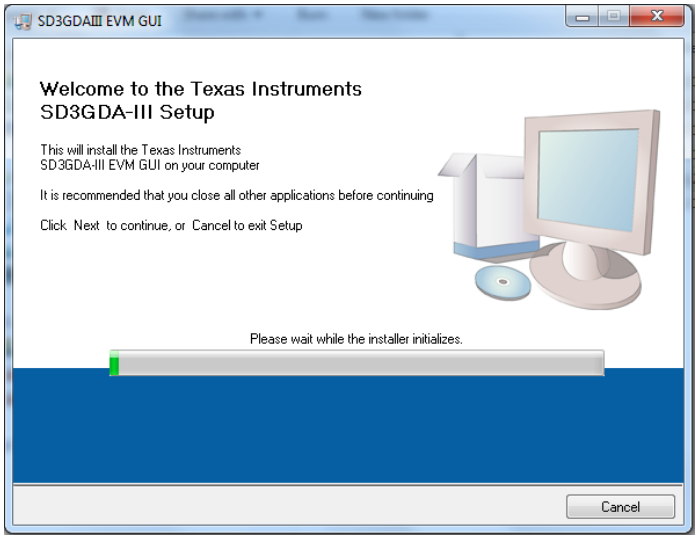

Once the installer has initialized, it will prompt you for locations to store the files. The SD3GDAIII GUI is built on the National Instruments LabView platform, so in addition to the GUI files, the installer will install some National Instruments software.

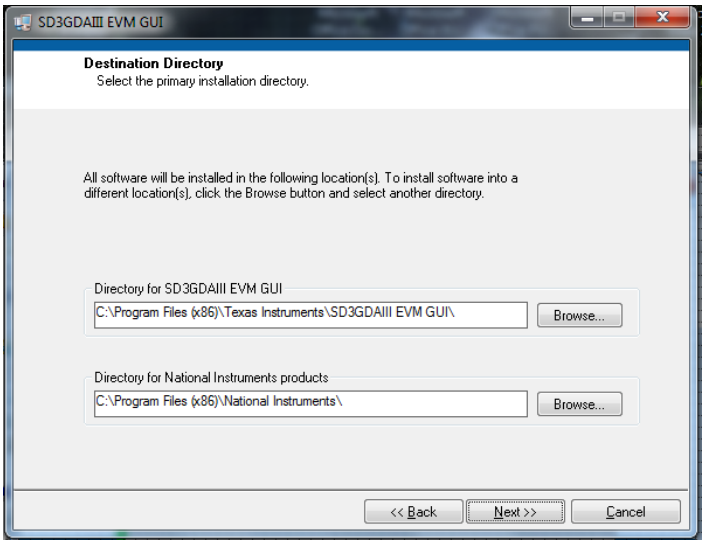

2.2 Connecting the Evaluation Board

The SD3GDAIII requires an external power source – it will do it's own power regulation, so any power supply from 12V to 20VDC may be used, connect power via the spade terminals at the top of the board. Once power is applied, connect the board to a USB port on the host computer with the enclosed cable, and provide the input with an SDI source signal. The source can be any of the 270Mbps, 1.5Gbps or 3Gbps data rates.
Presence of an input signal is indicated with the 'CD' (carrier detect) LED close to J3 – the SDI input port.

There are four BNC output connectors. Each output has the option for on board termination in the event that the output is not being used. The bottom connector, J9 has R32 as it's termination resistor, and as shipped, R32 is NOT installed – this means that J9, SDO- may be used as the primary output. The other three outputs (SDO+, SDO1- and SDO1-) have the termination resistor installed, so that the cable driver will see properly terminated outputs. If you want to use these outputs, remove the corresponding termination resistors (R23, R18 and R25).

2.3 Jumper and Option Settings

The SD3GDAIII has 5 locations for Jumper blocks, and several other option settings that are enabled/disabled with 0Ω resistors.

Jumper	Function when installed
P1	Disables SDO1 (Output to Media Card) on LMH0395
P2	Disables SDO0 (Output to LMH0376) on LMH0395
JP1	Forces Cable driver into HD/3G mode
JP2	If in Pin Mode (via R15) then this makes the SDO1 on the LMH0376 the recovered clock
JP5	If LMH0376 is in pin mode, a jumper here places the reclocker in Bypass

3 Running the GUI

3.1 Overview

Once setup, start the SD3GDAIII GUI, and it should open with a block diagram of the board:

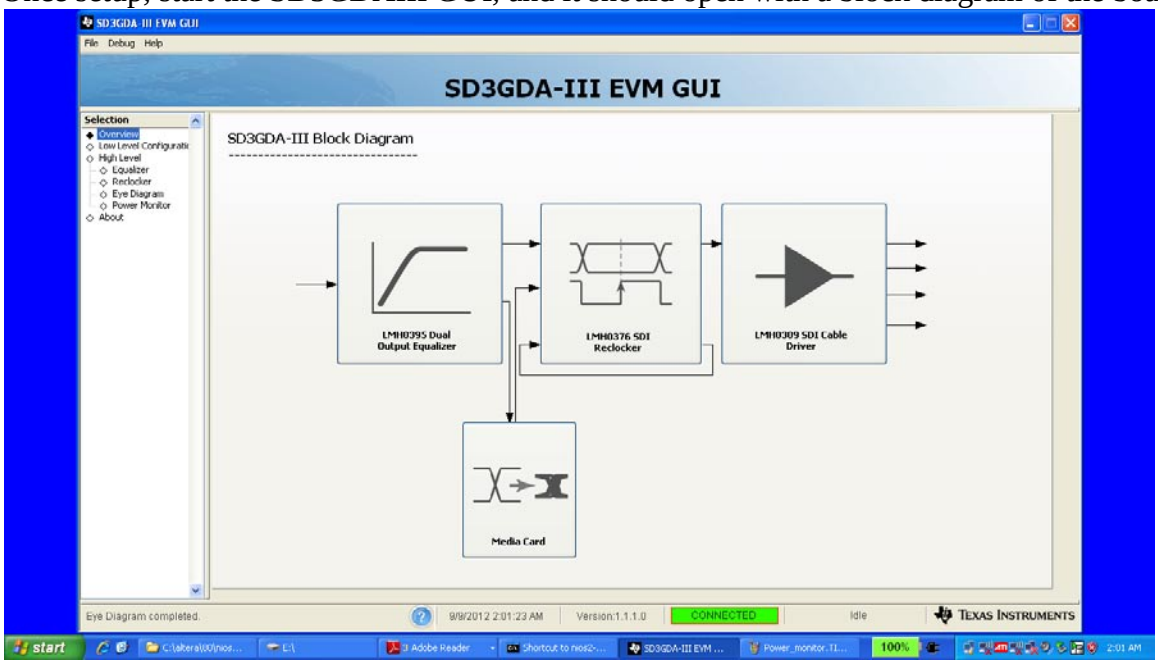

From this page, you can select what to do next via the selection panel on the left of the screen.

3.2 Direct Read/Write to registers

The first option, 'Low Level Configuration' will allow you to examine individual register contents and write to them. Clicking on this option will bring up this screen:

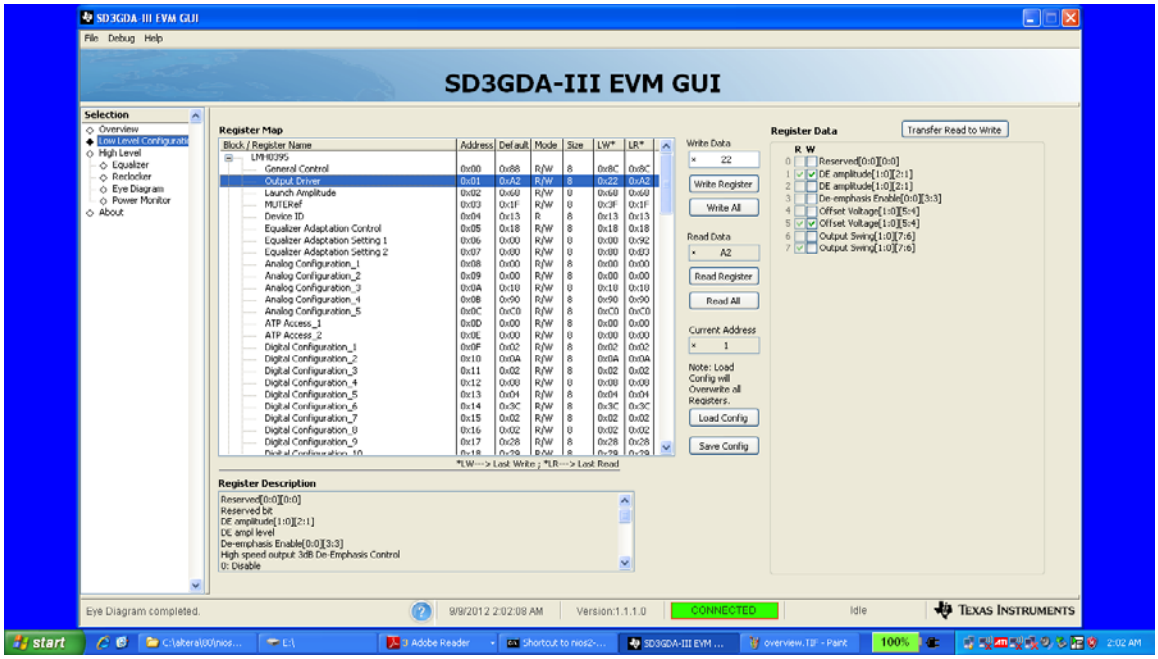

This screen shows each of the registers for each of the chips in the signal path on the board, and for each register it will show what the last value read from that register was, what the last value written was, and by clicking on one of the registers, it will give detail on each of the bits in the register. You can read individual registers and you can write to the individual registers through this page. If you set up a particular configuration for a part which you would like to reuse in the future, you can use the 'Save Configuration' and 'Load Configuration' buttons to save and recover settings for a part.

3.3 Equalizer Control Page

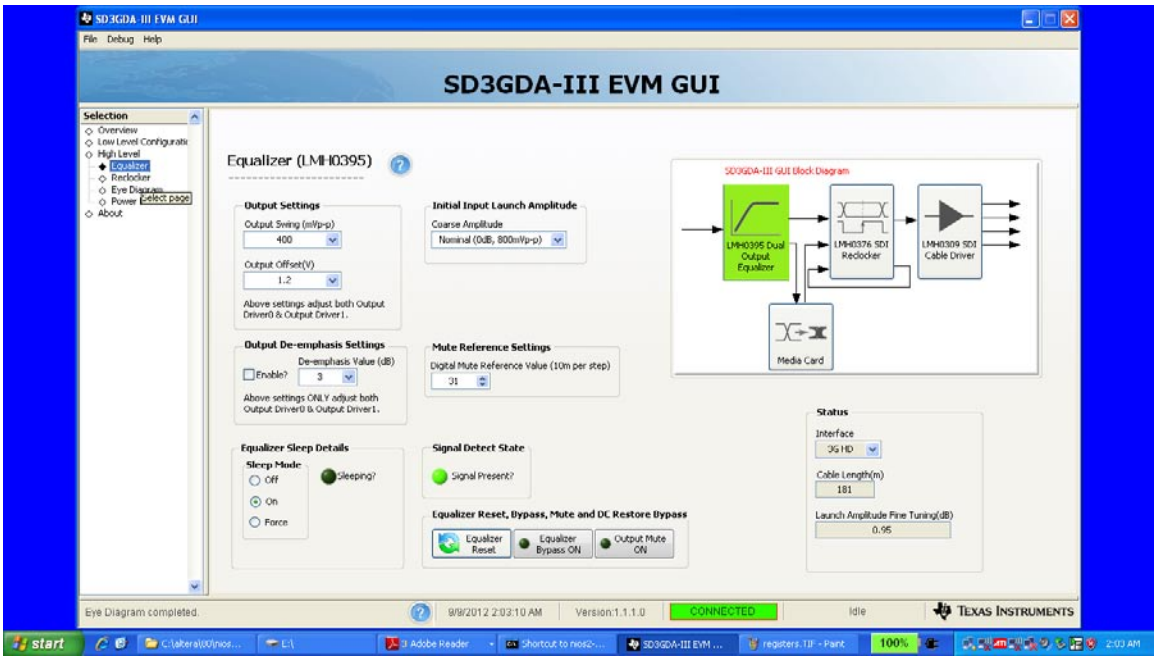

Selecting the Equalizer page brings up a page which reports the status of the equalizer, Some of the settings, such as the output settings can be set, but many of the other fields report status of the device.

3.4 Reclocker Control Page

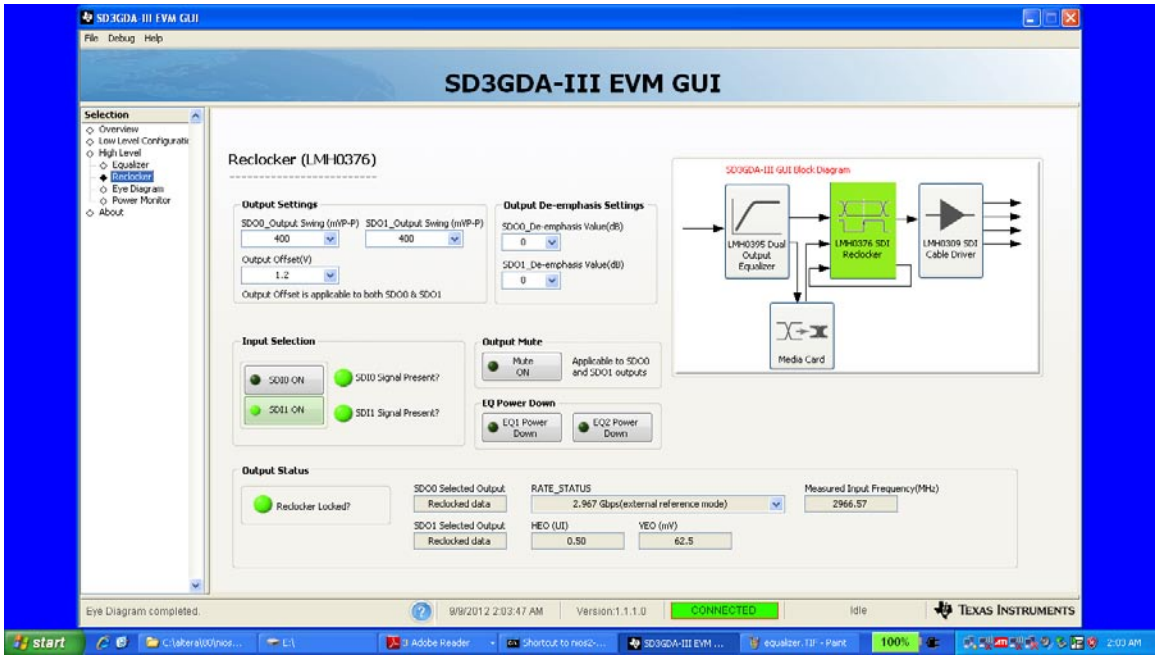

The reclocker page allows you to control the LMH0376 – there are output setting to allow the two outputs to be independently controlled for amplitude, offset and de-emphasis. If the LMH0376 is locked, this will be shown with the green indicator on the bottom left of the page, and the nominal rate at which the device is locked is shown. The user will also be able to read the Horizontal eye opening, and Vertical eye opening values from the GUI.

3.5 Eye Monitor Page

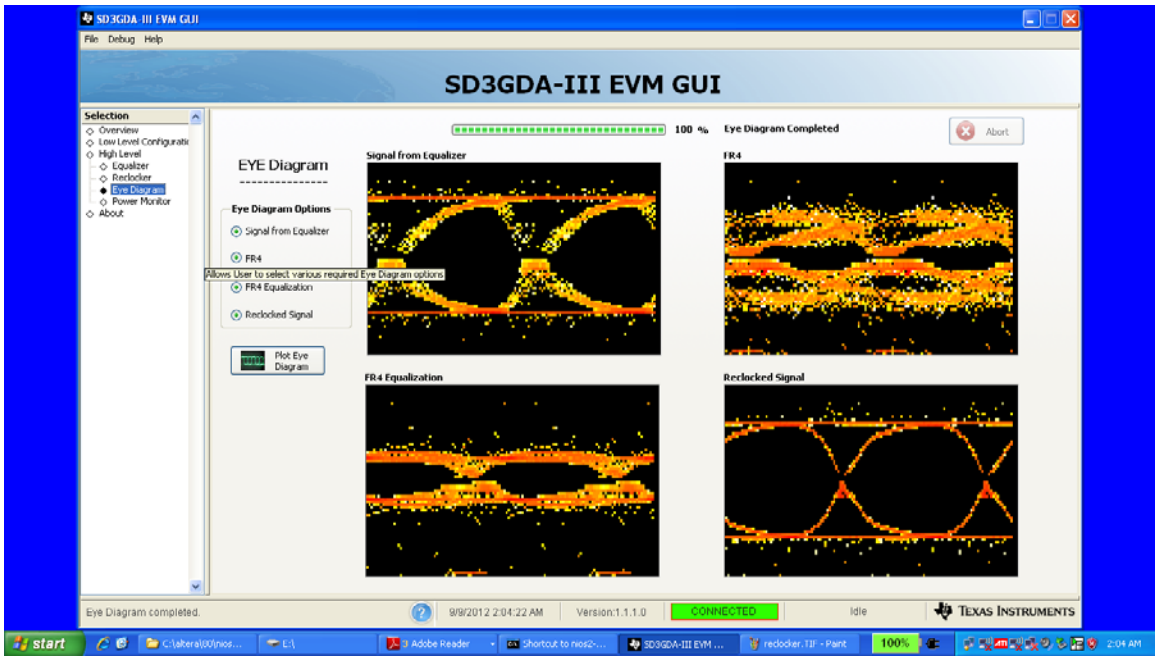

4 Media Card

The SD3GDAIII card has a media card inserted in the signal path between the equalizer and the reclocker. This card may be inserted in order to insert 25cm, 50cm or 100cm of PCB trace between the equalizer and the reclocker, to help the user to better simulate the use of the parts in a real system. Insert the media card into the MEDIA BOARD CONNECTOR – the length of trace is shown on the media card next to the fingers. There is also an option to use another card, connected with the SMA connectors on the Media Card, if the card is inserted appropriately.

5 Board Schematics

5.1 Equalizer Section

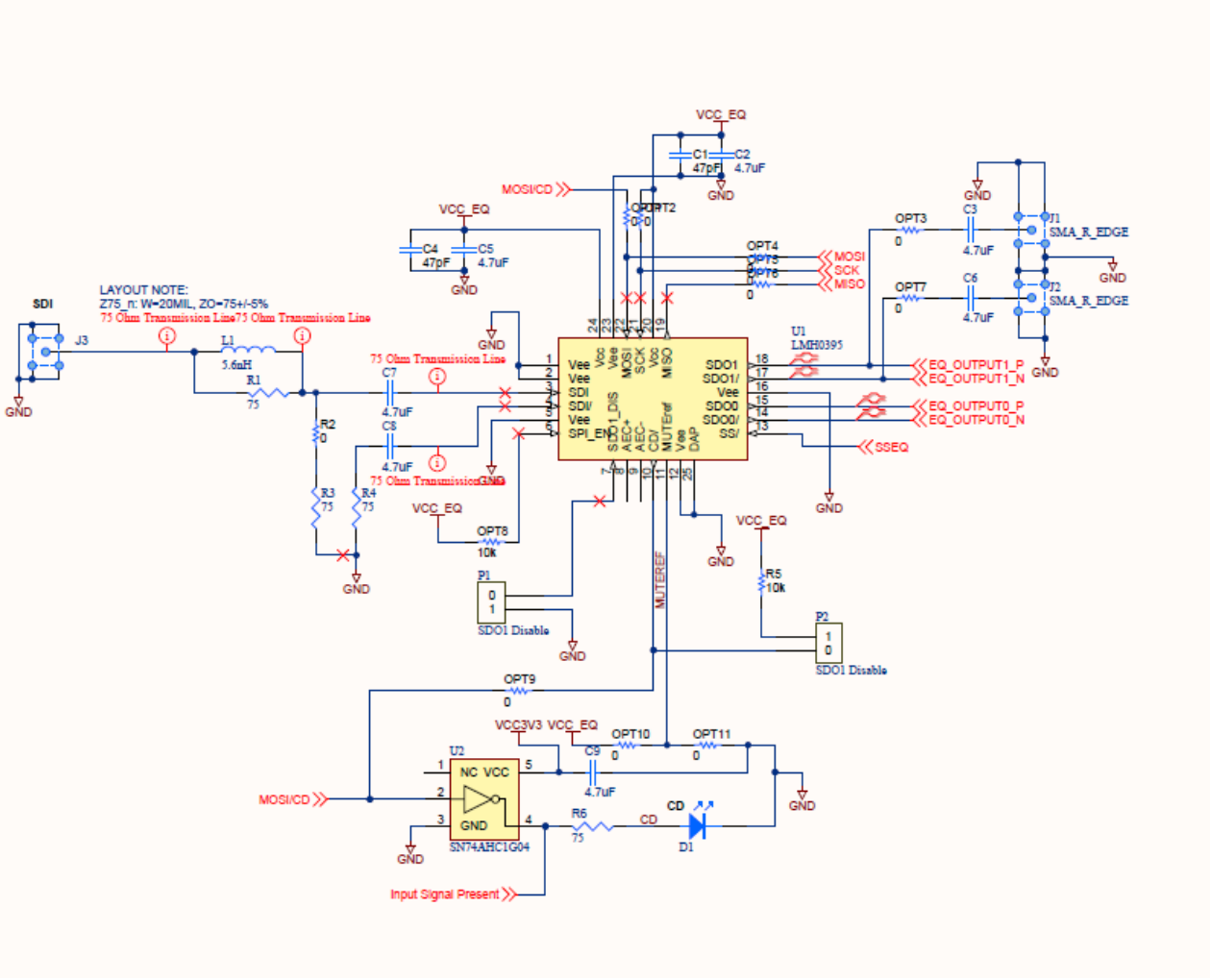

Figure 2 Equalizer Section Schematic

5.2 Reclocker Section

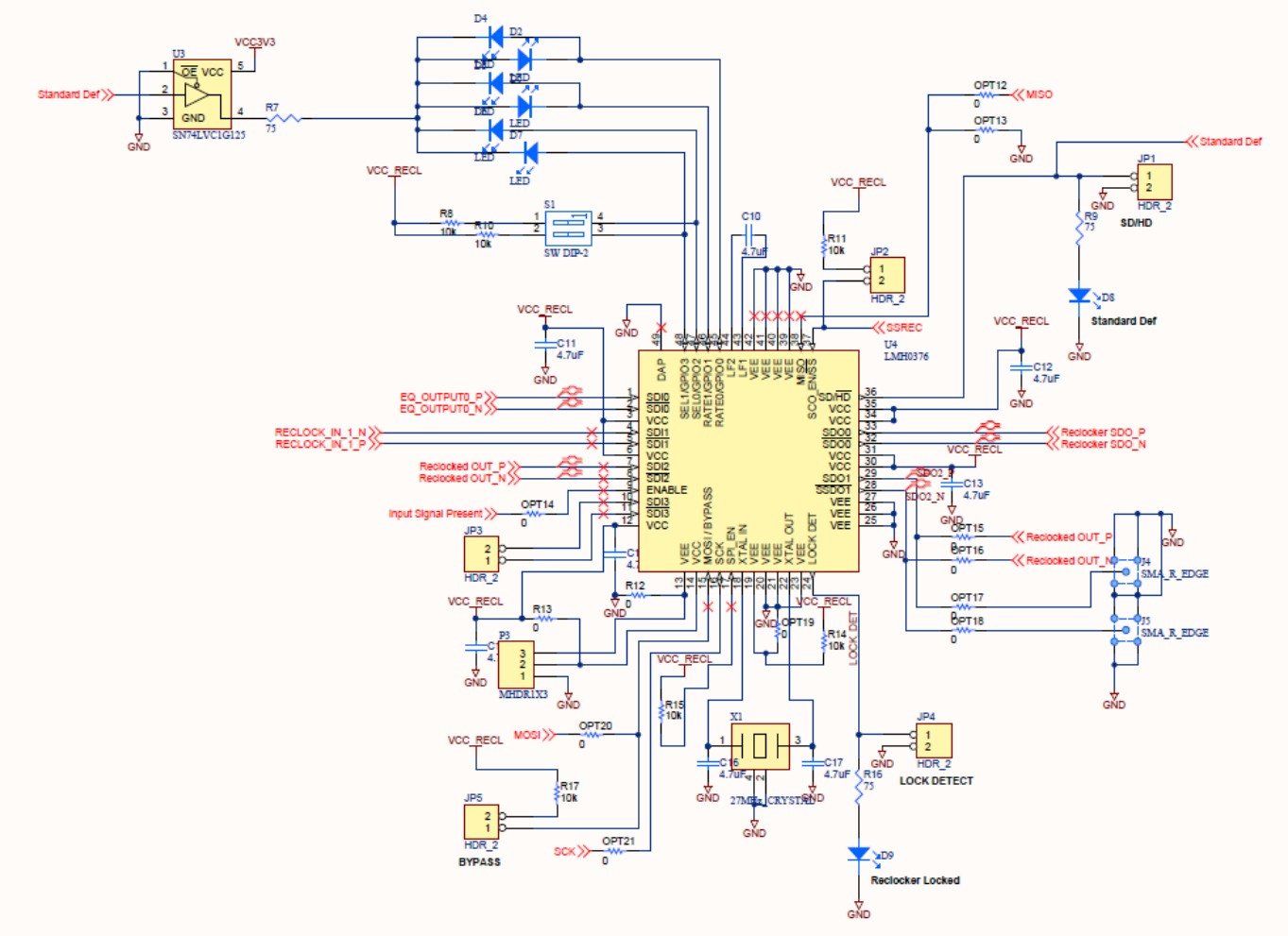

Figure 3 Reclocker Section Schematic

5.3 Cable Driver

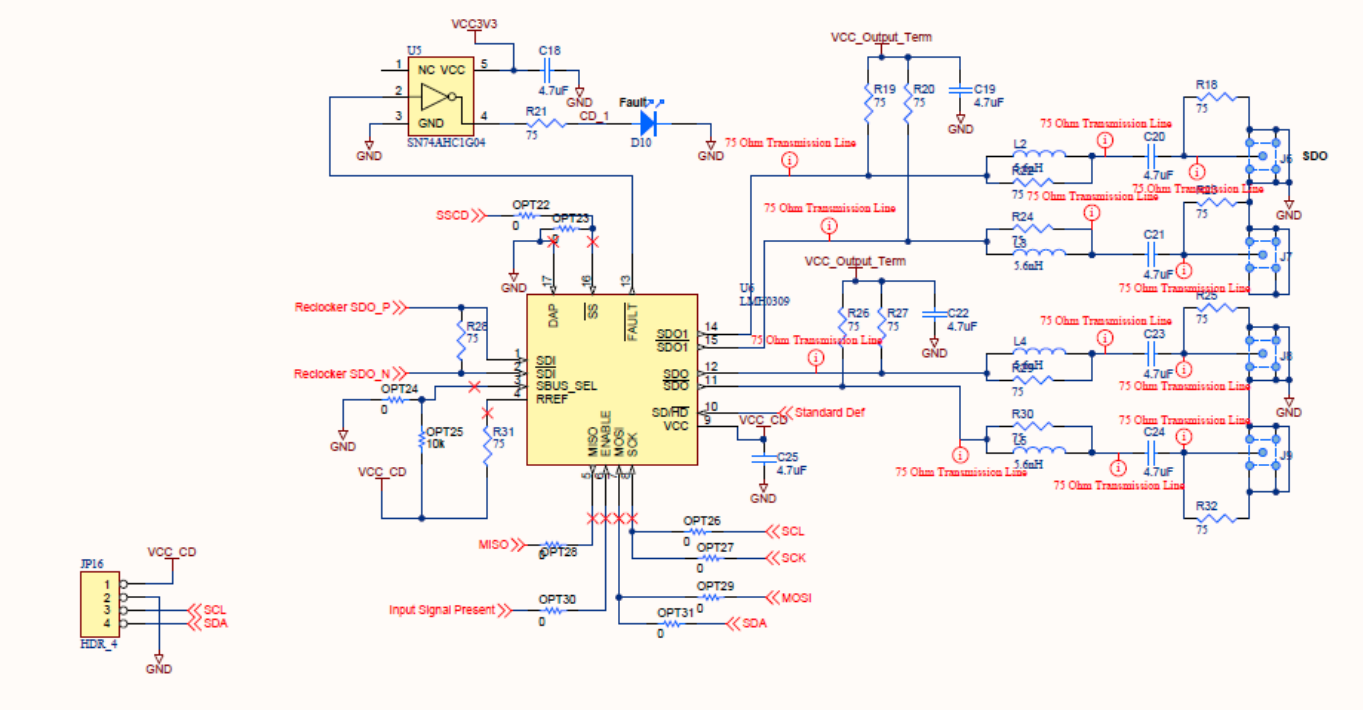

Figure 4 Cable Driver Section Schematic

5.4 USB Interface

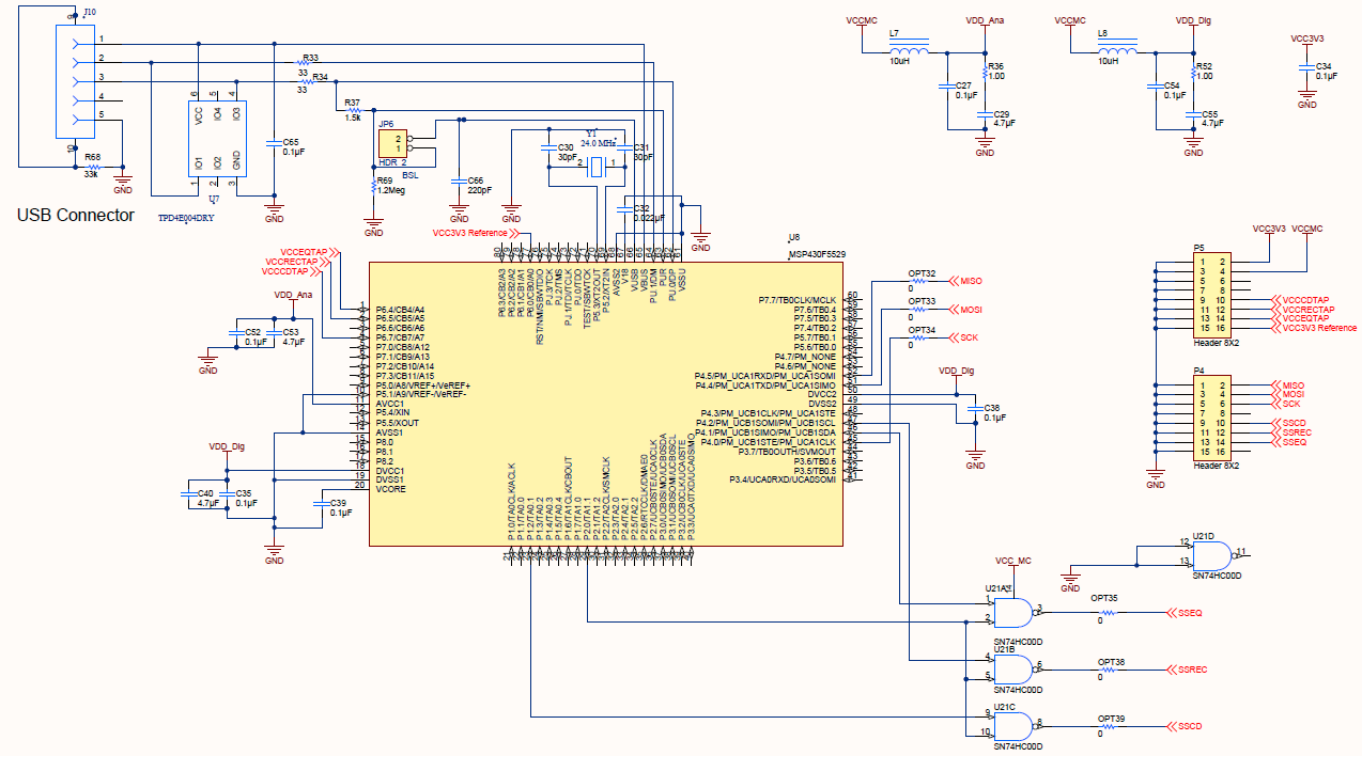

Figure 5 USB Interface Section Schematic

5.5 Power

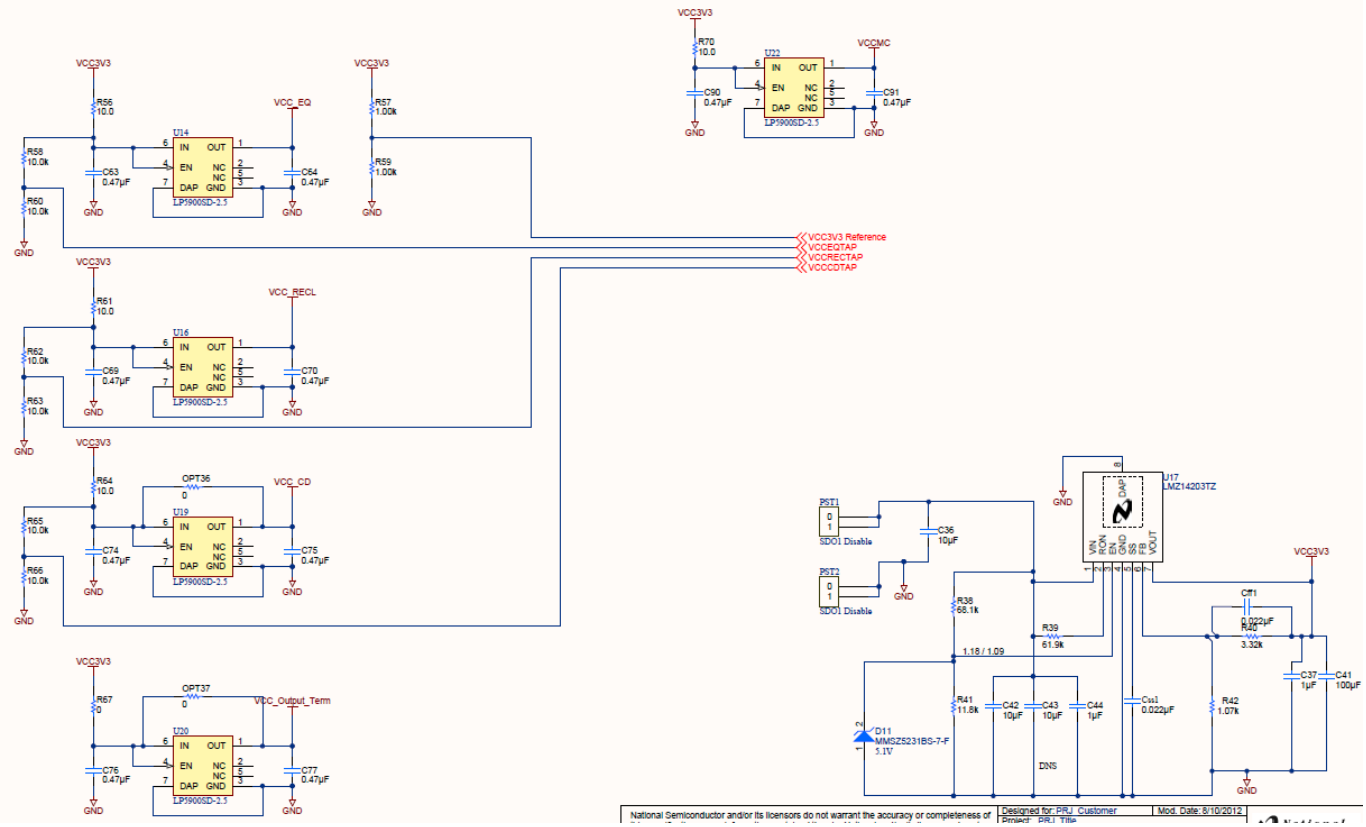

Figure 6 Power Management Section Schematic

5.6 Media Board

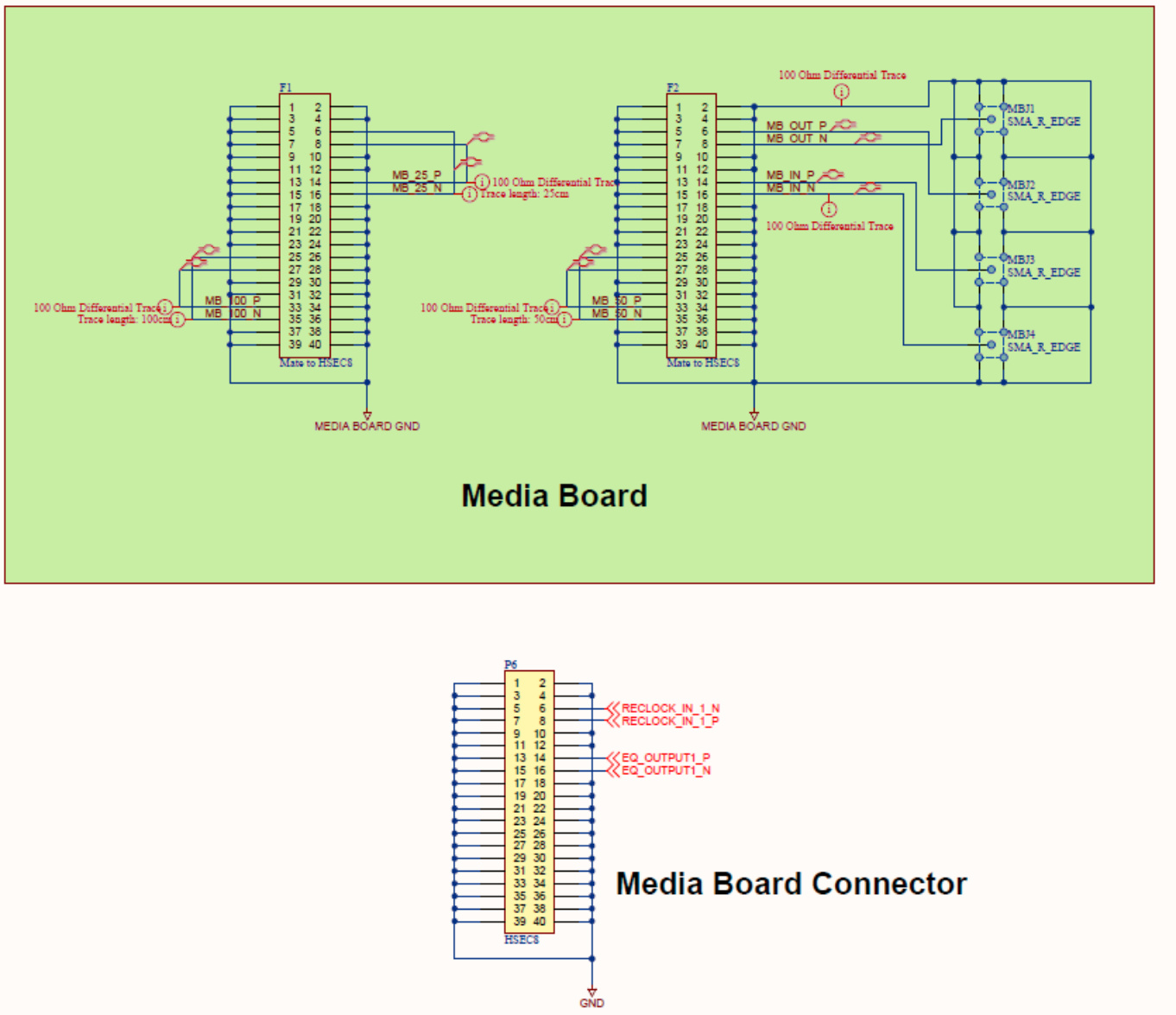

Figure 7 Media Board Schematic

6 Board Layout

6.1 Top Layer

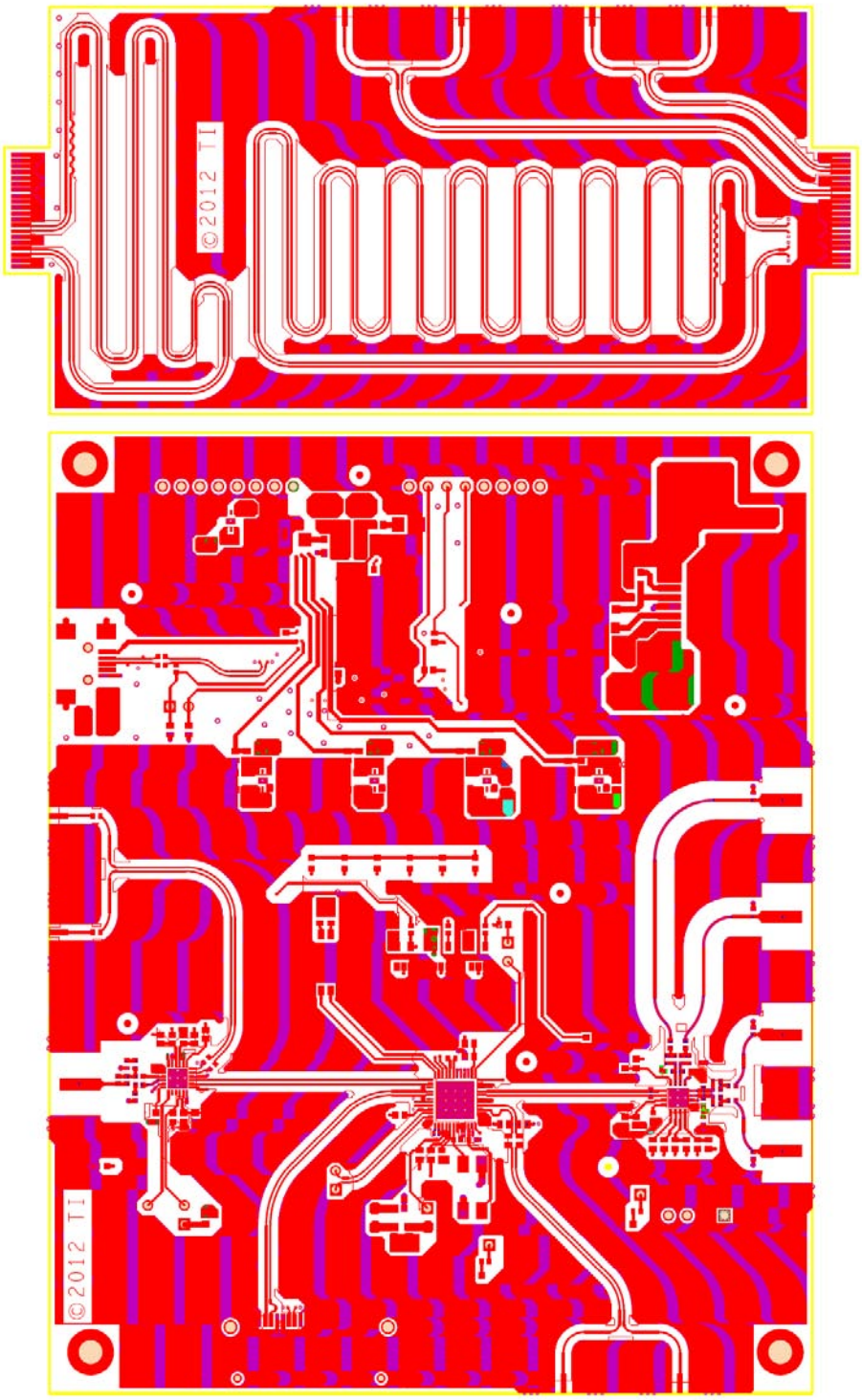

6.2 GND-1 Layer

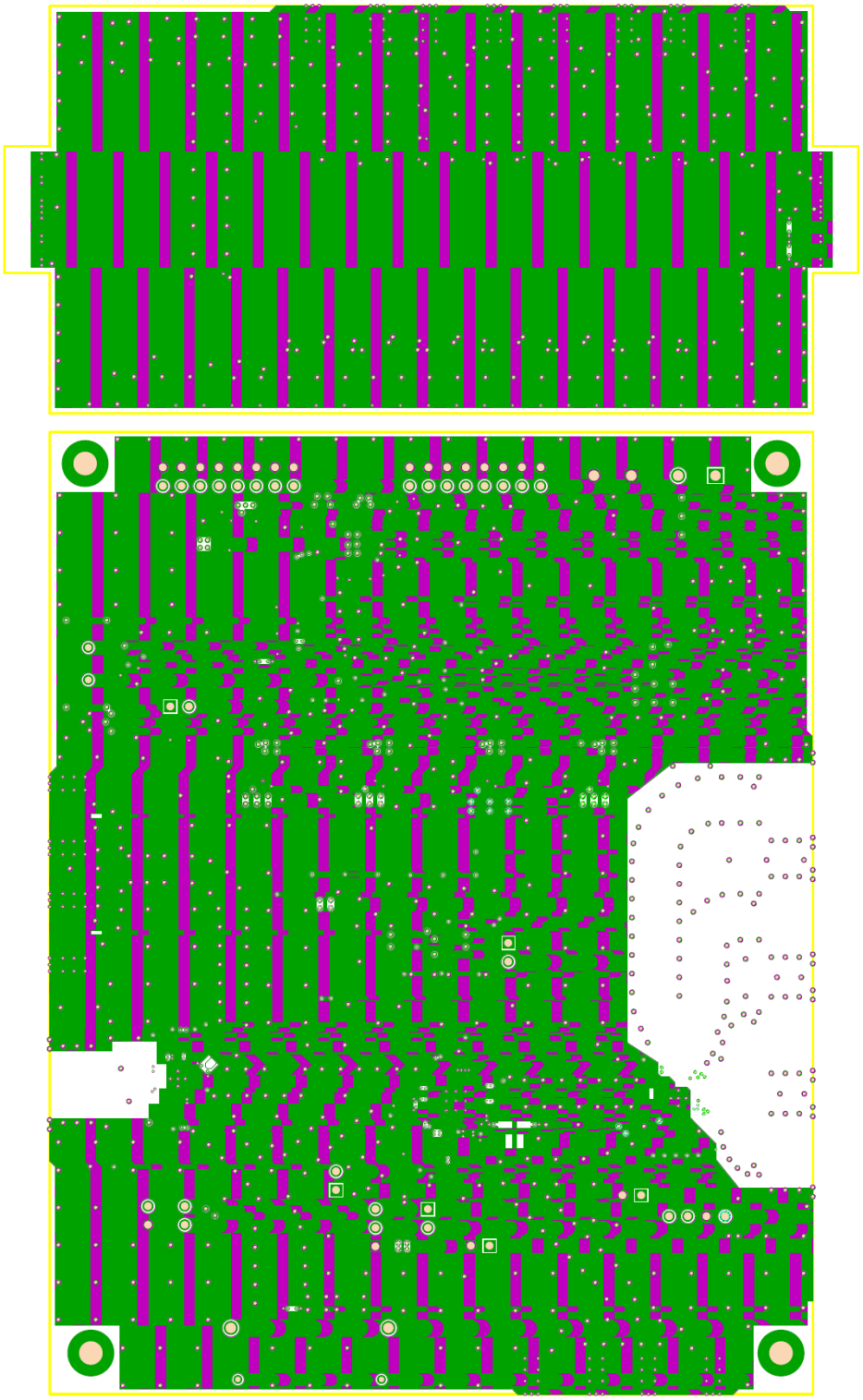

6.3 GND-2 Layer

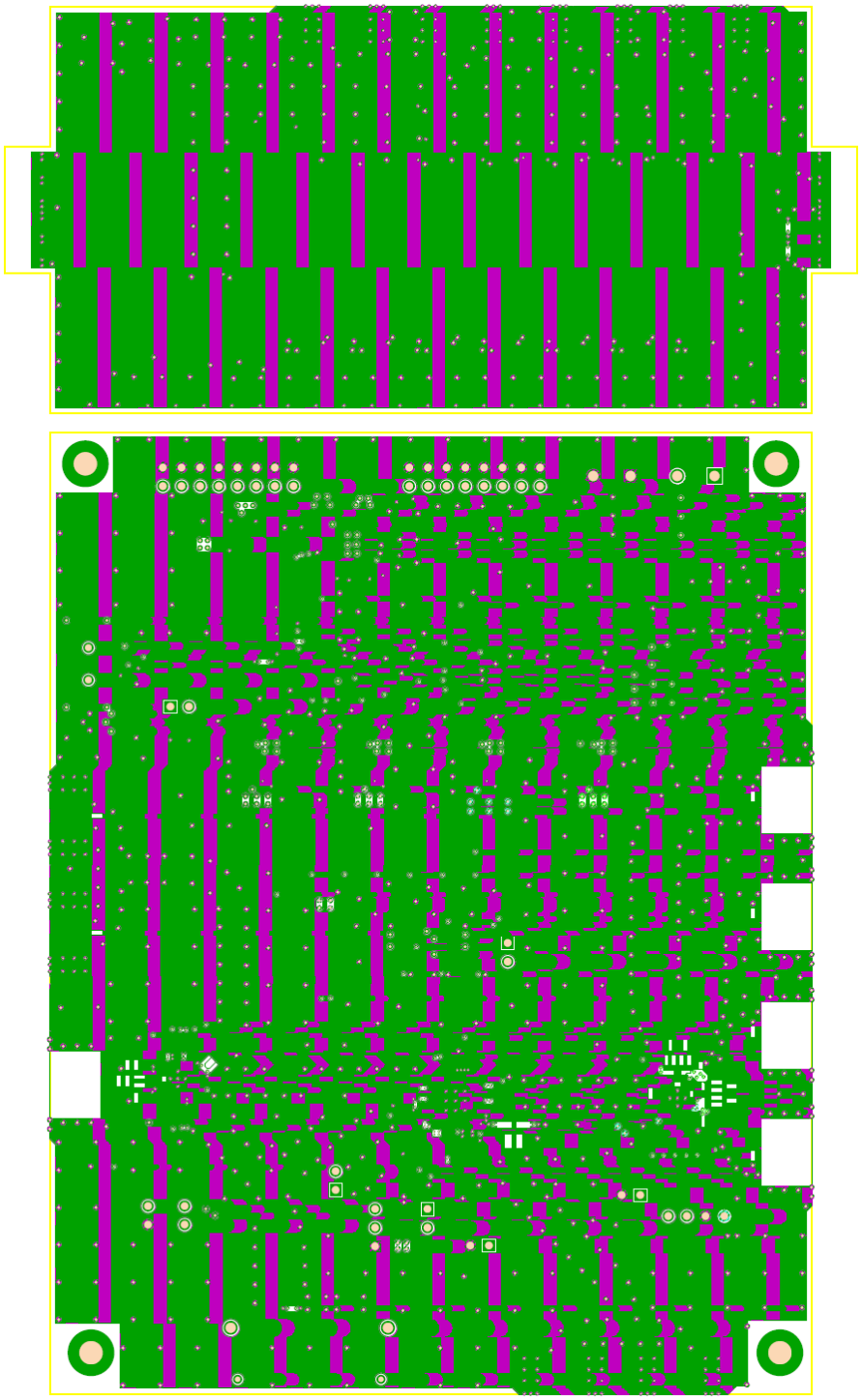

6.4 Sig-1 Layer

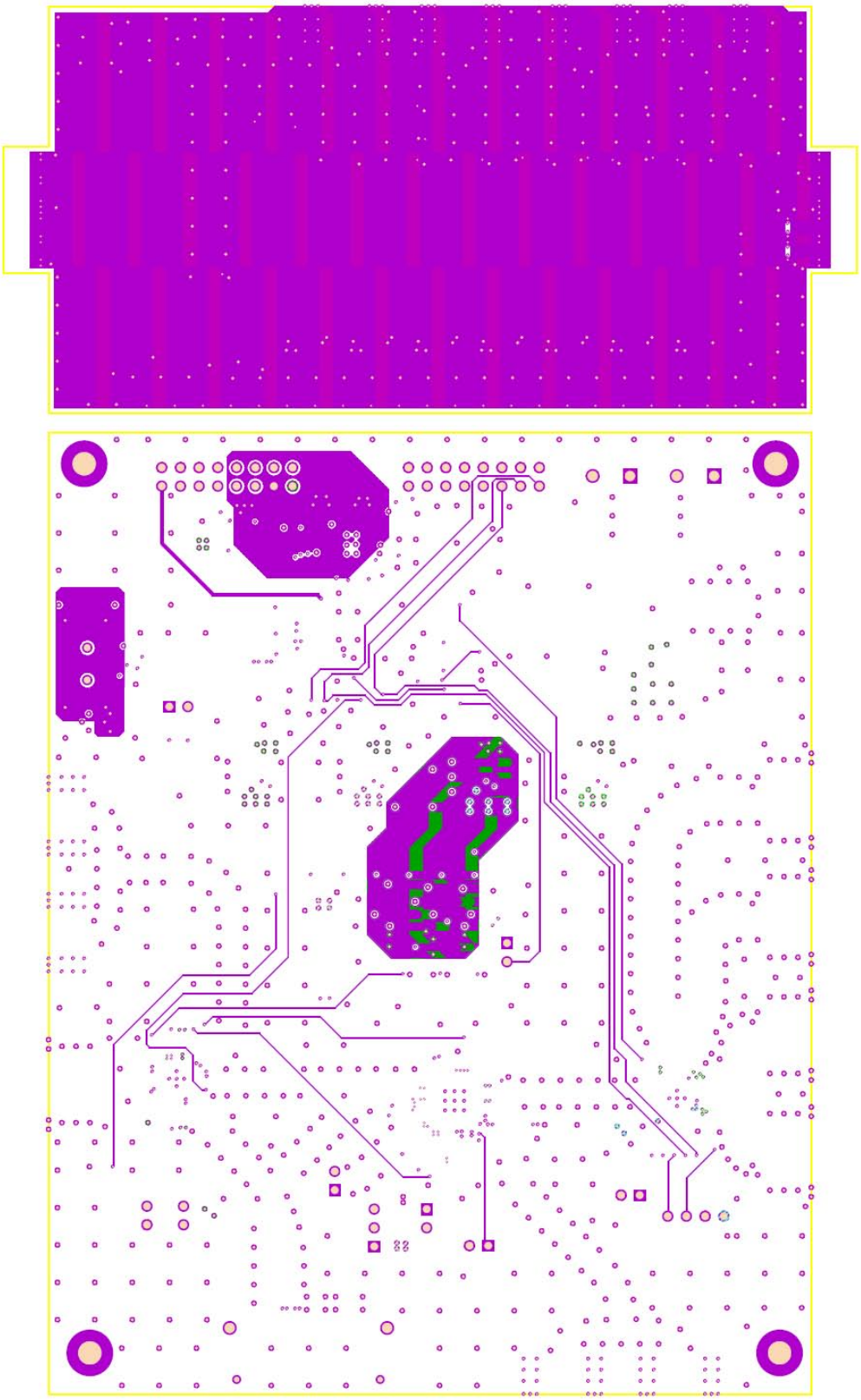

6.5 GND-3 Layer

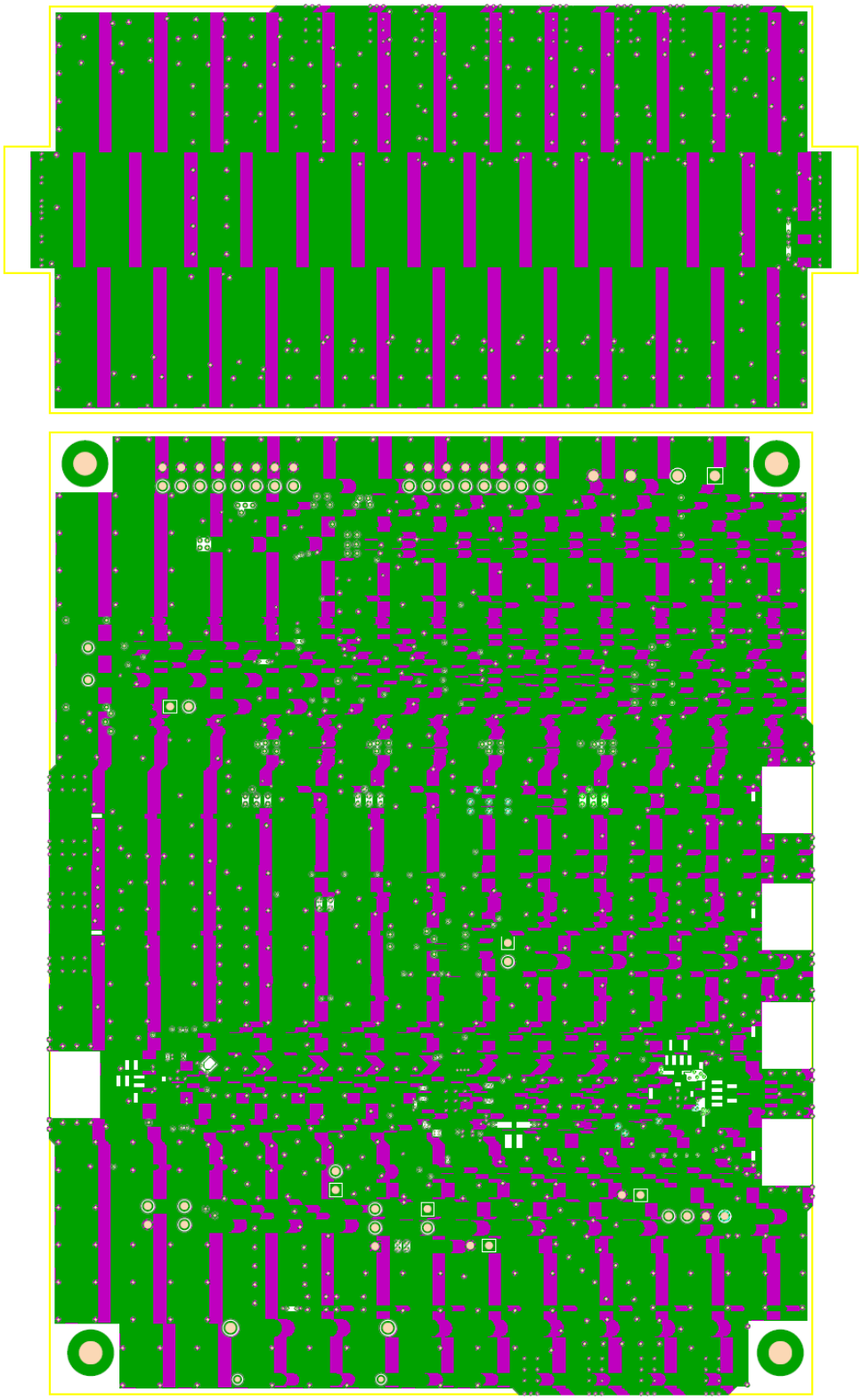

6.6 Vcc Layer

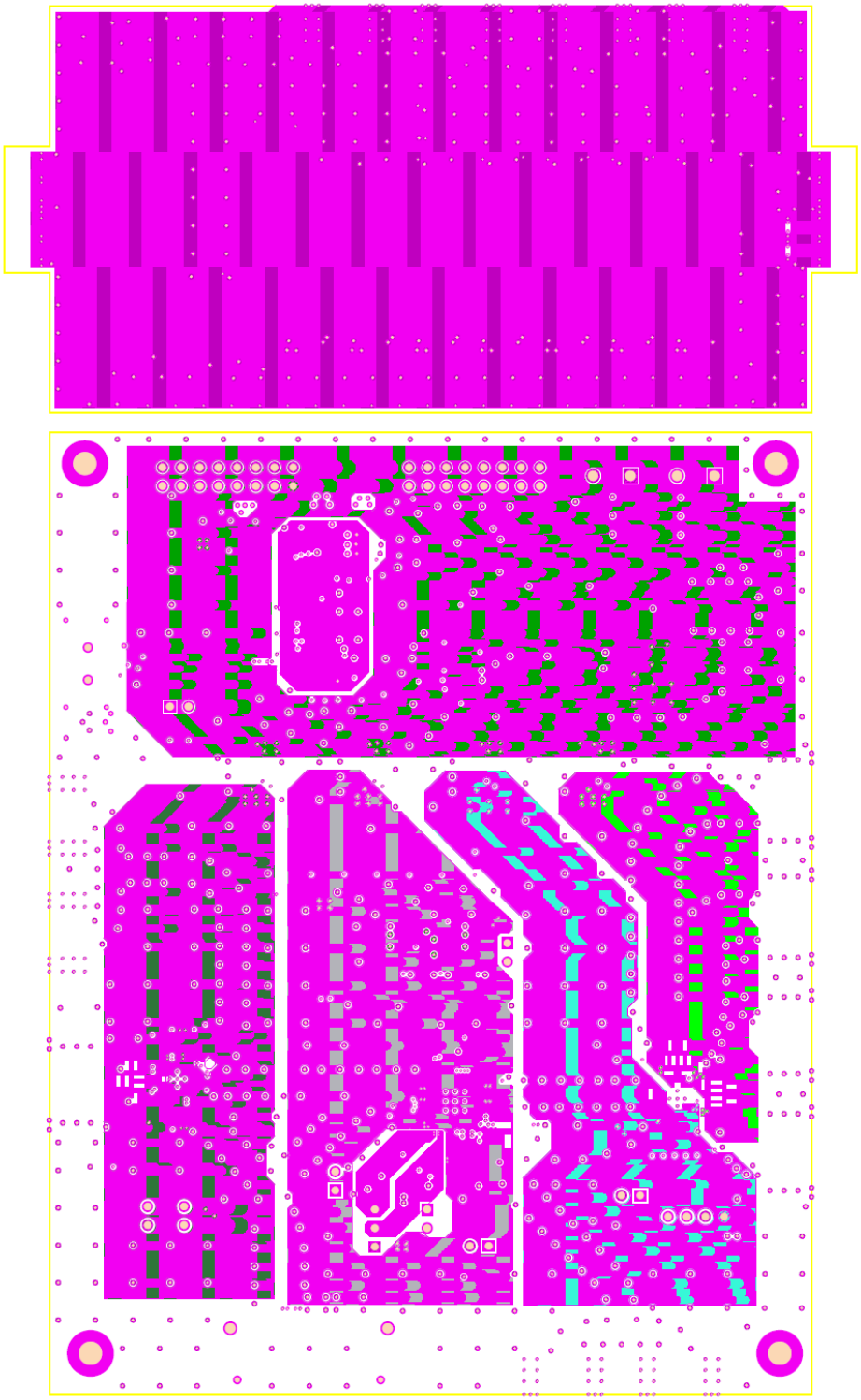

6.7 GND-4 Layer

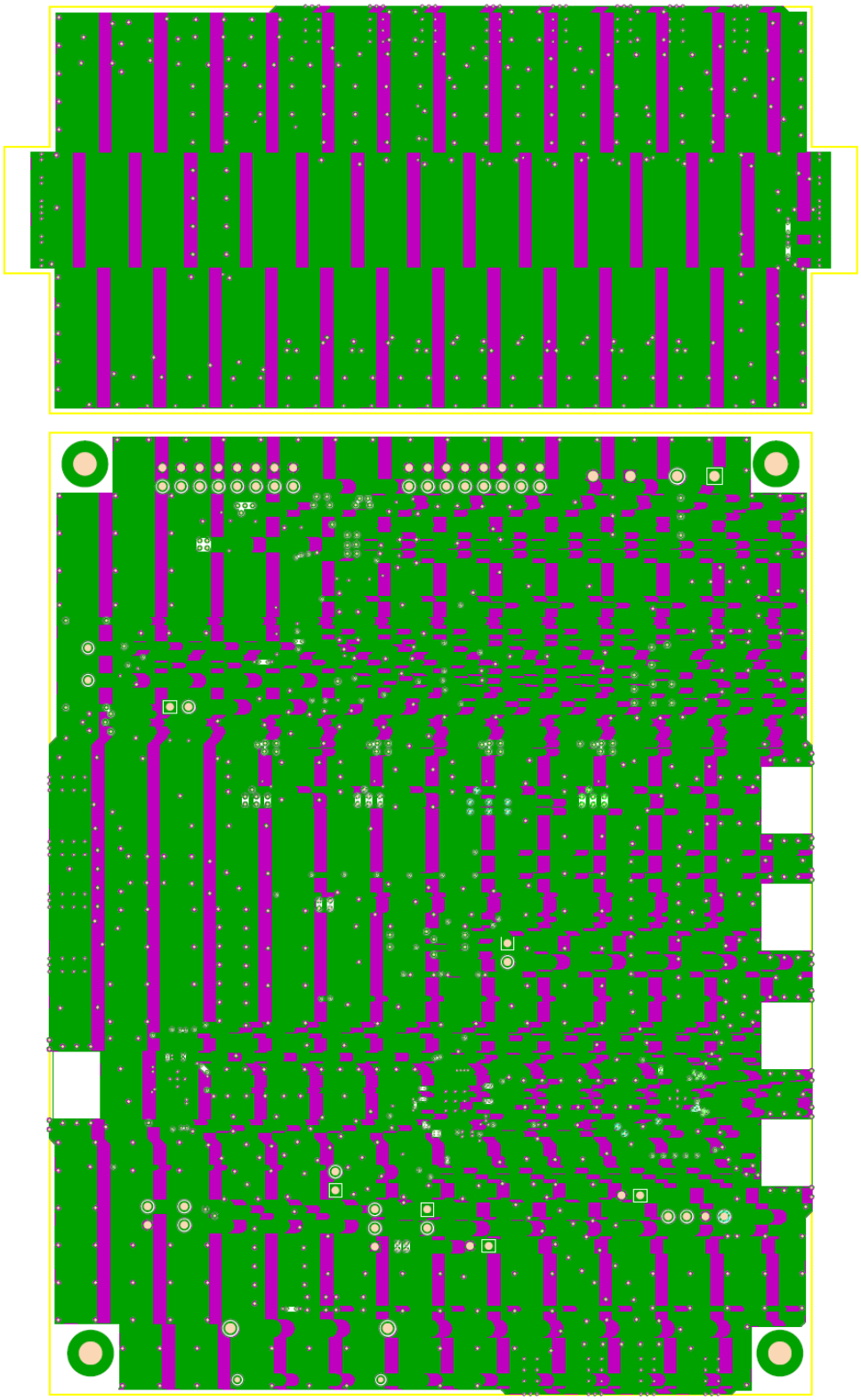

6.8 Bottom Layer

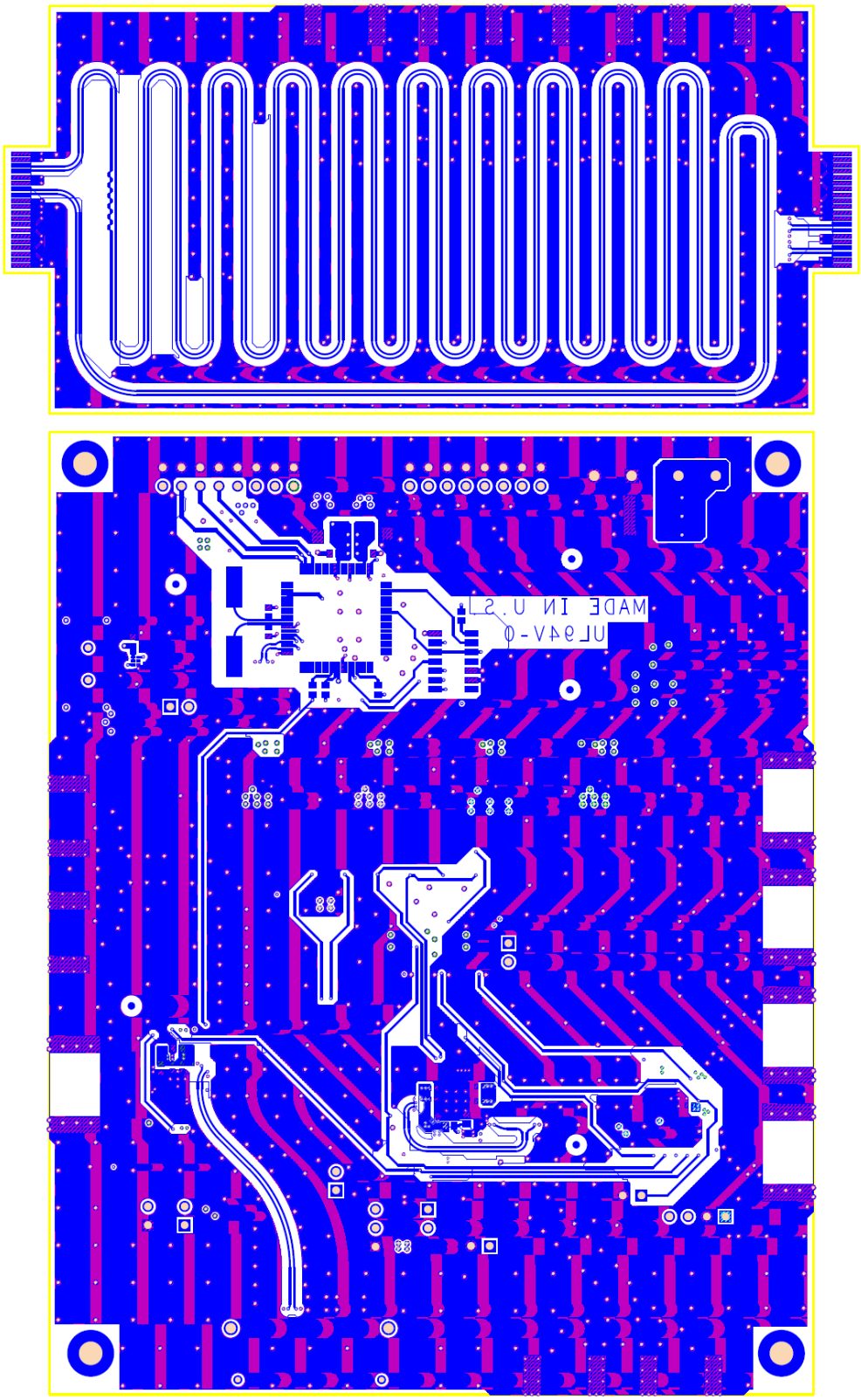

7 Bill of Materials

Designator	Description	Comment	Quantity
C1, C4	CAP, CERM, 47pF, 50V, +/-5%, C0G/NP0, 0603	06035A470JAT2A	2
C2, C3, C5, C6, C7, C8, C9, C10, C11, C12, C13, C14, C15, C16, C17, C18, C19, C20, C21, C22, C23, C24, C25	Capacitor, 4.7uF, 6.3V, X5R, 0402	4.7uF	23
C27, C34, C35, C38, C39, C52, C54	CAP, CERM, 0.1uF, 50V, +/-10%, X7R, 0603	GRM188R71H104KA93D	7
C29, C40, C53, C55	CAP, CERM, 4.7uF, 16V, +/-10%, X7R, 1206	C3216X7R1C475K	4
C30, C31	CAP, CERM, 30pF, 100V, +/-5%, C0G/NP0, 0603	GRM1885C2A300JA01D	2
C32	CAP, CERM, 0.022uF, 16V, +/-10%, X7R, 0603	GRM188R71C223KA01D	1
C36, C42, C43	CAP, CERM, 10uF, 50V, +/-20%, X7R, 2220	C5750X7R1H106M	3
C37, C44	CAP, CERM, 1uF, 50V, +/-10%, X7R, 1206	C3216X7R1H105K	2
C41	CAP, CERM, 100uF, 6.3V, +/-20%, X5R, 1206	GRM31CR60J107ME39L	1
C63, C64, C69, C70, C74, C75, C76, C77, C90, C91	CAP, CERM, 0.47uF, 16V, +/-10%, X7R, 0603	GRM188R71C474KA88D	10
C65	CAP, CERM, 0.1uF, 16V, +/-5%, X7R, 0603	0603YC104JAT2A	1
C66	CAP, CERM, 220pF, 50V, +/-1%, C0G/NP0, 0603	06035A221FAT2A	1
Cff1, Css1	CAP, CERM, 0.022uF, 100V, +/-5%, X7R, 0805	08051C223JAT2A	2
D1, D2, D3, D4, D5, D6, D7, D8, D9, D10	LED, Green, 0603	LED	10
F1, F2	card edge connector 20-Pin, Dual row	Mate to HSEC8	2
J1, J2, J4, J5, MBJ1, MBJ2, MBJ3, MBJ4	SMA Edge Launch	SMA_R_EDGE	8
J3, J6, J7, J8, J9	BNC, Trompeter, 75-ohm, edge launch	BNC_EDGE	5
J10	Connector, Recpt, USB-B, Mini, 5-pins, SMT	CONN_USB_1734328	1
JP1, JP2, JP3, JP4, JP5, JP6	Header, 2x1, 0.1"	HDR_2	6
JP16	PIN HEADER, 4x1, 0.1" PITCH	HDR_4	1
L1, L2, L3, L4, L5	5.6nH, 0402, Inductor	5.6nH	5
L7, L8	INDUCTOR 10UH 100MA 0805	10uH	2
OPT1, OPT2, OPT4, OPT5, OPT6, OPT9, OPT10, OPT11, OPT12, OPT13, OPT14, OPT15, OPT16, OPT17, OPT18, OPT19, OPT20, OPT21, OPT22, OPT23, OPT24, OPT26, OPT27, OPT28, OPT29, OPT30, OPT31, OPT32, OPT33, OPT34, OPT35, OPT36, OPT37, OPT38, OPT39, R12, R13, R67	RES, 0 ohm, 5%, 0.1W, 0603	CRCW06030000Z0EA	38
OPT3, OPT7, R2	RES, 0 ohm, 5%, 0.063W, 0402	ERJ-2GE0R00X	3
OPT8, OPT25, R5, R8, R10, R11, R14, R15, R17	RES, 10k ohm, 5%, 0.1W, 0603	CRCW060310K0JNEA	9
P1, P2	Power Supply Terminal	SDO1 Disable	2

P3	Header, 3-Pin	MHDR1X3	1
P4, P5	CONN HEADER 16POS .100 STR TIN	Header 8X2	2
P6	Header, 20-Pin, Dual row	HSEC8	1
PST1, PST2	Power Supply Terminal	SDO1 Disable	2
R1, R3, R4, R6, R7, R9, R16, R18, R19, R20, R21, R22, R23, R24, R25, R26, R27, R28, R29, R30, R31, R32	75 Ohm Resistor, 0402	75	22
R33, R34	RES, 33 ohm, 5%, 0.063W, 0402	CRCW040233R0JNED	2
R36, R52	RES, 1.00 ohm, 1%, 0.1W, 0603	RC0603FR-071RL	2
R37	RES, 1.5k ohm, 5%, 0.063W, 0402	CRCW04021K50JNED	1
R38	RES, 68.1k ohm, 1%, 0.1W, 0603	CRCW060368K1FKEA	1
R39	RES, 61.9k ohm, 1%, 0.1W, 0603	CRCW060361K9FKEA	1
R40	RES, 3.32k ohm, 1%, 0.1W, 0603	CRCW06033K32FKEA	1
R41	RES, 11.8k ohm, 1%, 0.1W, 0603	CRCW060311K8FKEA	1
R42	RES, 1.07k ohm, 1%, 0.1W, 0603	CRCW06031K07FKEA	1
R56, R61, R64, R70	RES, 10.0 ohm, 1%, 0.1W, 0603	CRCW060310R0FKEA	4
R57, R59	RES, 1.00k ohm, 0.1%, 0.1W, 0603	RG1608P-102-B-T5	2
R58, R60, R62, R63, R65, R66	RES, 10.0k ohm, 0.1%, 0.1W, 0603	RG1608P-103-B-T5	6
R68	RES, 33k ohm, 5%, 0.063W, 0402	CRCW040233K0JNED	1
R69	RES, 1.2Meg ohm, 5%, 0.1W, 0603	CRCW06031M20JNEA	1
S1	DIP Switch, 2 Position, SPST	SW DIP-2	1
U1	SDI Equalizer	LMH0395	1
U2, U5	IC INVERTER	SN74AHC1G04	2
U3	IC BUFFER	SN74LVC1G125	1
U4	SDI Reclocker	LMH0376	1
U6	LMH0309 Cable Driver	LMH0309	1
U7	IC, 4-Chan ESD-Protection Array	TPD4E004DRY	1
U8	Microcontroller	MSP430F5529	1
U14, U16, U19, U20, U22	Ultra Low Noise, 150mA Linear Regulator for RF/Analog Circuits Requires No Bypass Capacitor	LP5900SD-2.5	5
U17	Simple Switcher Power Module	LMZ14203TZ	1
U21	Quadruple 2-Input Positive-NAND Gate	SN74HC00D	1
X1	27 MHz VCXO	27MHz_CRYSTAL	1
Y1	Crystal, SMT Quart Crystal	CRYSTAL_ATS-SM_SERIES	1

8 EVALUATION BOARD/KIT/MODULE (EVM) ADDITIONAL TERMS

Texas Instruments (TI) provides the enclosed Evaluation Board/Kit/Module (EVM) under the following conditions: The user assumes all responsibility and liability for proper and safe handling of the goods. Further, the user indemnifies TI from all claims arising from the handling or use of the goods.

Should this evaluation board/kit not meet the specifications indicated in the User's Guide, the board/kit may be returned within 30 days from the date of delivery for a full refund. THE FOREGOING LIMITED WARRANTY IS THE EXCLUSIVE WARRANTY MADE BY SELLER TO BUYER AND IS IN LIEU OF ALL OTHER WARRANTIES, EXPRESSED, IMPLIED, OR STATUTORY, INCLUDING ANY WARRANTY OF MERCHANTABILITY OR FITNESS FOR ANY PARTICULAR PURPOSE. EXCEPT TO THE EXTENT OF THE INDEMNITY SET FORTH ABOVE, NEITHER PARTY SHALL BE LIABLE TO THE OTHER FOR ANY INDIRECT, SPECIAL, INCIDENTAL, OR CONSEQUENTIAL DAMAGES.

Please read the User's Guide and, specifically, the Warnings and Restrictions notice in the User's Guide prior to handling the product. This notice contains important safety information about temperatures and voltages. For additional information on TI's environmental and/or safety programs, please visit www.ti.com/esh or contact TI.

No license is granted under any patent right or other intellectual property right of TI covering or relating to any machine, process, or combination in which such TI products or services might be or are used. TI currently deals with a variety of customers for products, and therefore our arrangement with the user is not exclusive. TI assumes no liability for applications assistance, customer product design, software performance, or infringement of patents or services described herein.

REGULATORY COMPLIANCE INFORMATION

As noted in the EVM User's Guide and/or EVM itself, this EVM and/or accompanying hardware may or may not be subject to the Federal Communications Commission (FCC) and Industry Canada (IC) rules.

For EVMs **not** subject to the above rules, this evaluation board/kit/module is intended for use for ENGINEERING DEVELOPMENT, DEMONSTRATION OR EVALUATION PURPOSES ONLY and is not considered by TI to be a finished end product fit for general consumer use. It generates, uses, and can radiate radio frequency energy and has not been tested for compliance with the limits of computing devices pursuant to part 15 of FCC or ICES-003 rules, which are designed to provide reasonable protection against radio frequency interference. Operation of the equipment may cause interference with radio communications, in which case the user at his own expense will be required to take whatever measures may be required to correct this interference.

General Statement for EVMs including a radio

User Power/Frequency Use Obligations: This radio is intended for development/professional use only in legally allocated frequency and power limits. Any use of radio frequencies and/or power availability of this EVM and its development application(s) must comply with local laws governing radio spectrum allocation and power limits for this evaluation module. It is the user's sole responsibility to only operate this radio in legally acceptable frequency space and within legally mandated power limitations. Any exceptions to this are strictly prohibited and unauthorized by Texas Instruments unless user has obtained appropriate experimental/development licenses from local regulatory authorities, which is responsibility of user including its acceptable authorization.

For EVMs annotated as FCC – FEDERAL COMMUNICATIONS COMMISSION Part 15 Compliant

Caution
This device complies with part 15 of the FCC Rules. Operation is subject to the following two conditions: (1) This device may not cause harmful interference, and (2) this device must accept any interference received, including interference that may cause undesired operation.

Changes or modifications not expressly approved by the party responsible for compliance could void the user's authority to operate the equipment.

FCC Interference Statement for Class A EVM devices
This equipment has been tested and found to comply with the limits for a Class A digital device, pursuant to part 15 of the FCC Rules. These limits are designed to provide reasonable protection against harmful interference when the equipment is operated in a commercial environment. This equipment generates, uses, and can radiate radio frequency energy and, if not installed and used in accordance with the instruction manual, may cause harmful interference to radio communications. Operation of this equipment in a residential area is likely to cause harmful interference in which case the user will be required to correct the interference at his own expense.

FCC Interference Statement for Class B EVM devices
This equipment has been tested and found to comply with the limits for a Class B digital device, pursuant to part 15 of the FCC Rules. These limits are designed to provide reasonable protection against harmful interference in a residential installation. This equipment generates, uses and can radiate radio frequency energy and, if not installed and used in accordance with the instructions, may cause harmful interference to radio communications. However, there is no guarantee that interference will not occur in a particular installation. If this equipment does cause harmful interference to radio or television reception, which can be determined by turning the equipment off and on, the user is encouraged to try to correct the interference by one or more of the following measures:

- Reorient or relocate the receiving antenna.
- Increase the separation between the equipment and receiver.
- Connect the equipment into an outlet on a circuit different from that to which the receiver is connected.
- Consult the dealer or an experienced radio/TV technician for help.

For EVMs annotated as IC – INDUSTRY CANADA Compliant
This Class A or B digital apparatus complies with Canadian ICES-003.

Changes or modifications not expressly approved by the party responsible for compliance could void the user's authority to operate the equipment.

Concerning EVMs including radio transmitters
This device complies with Industry Canada licence-exempt RSS standard(s). Operation is subject to the following two conditions: (1) this device may not cause interference, and (2) this device must accept any interference, including interference that may cause undesired operation of the device.

Concerning EVMs including detachable antennas
Under Industry Canada regulations, this radio transmitter may only operate using an antenna of a type and maximum (or lesser) gain approved for the transmitter by Industry Canada. To reduce potential radio interference to other users, the antenna type and its gain should be so chosen that the equivalent isotropically radiated power (e.i.r.p.) is not more than that necessary for successful communication.

This radio transmitter has been approved by Industry Canada to operate with the antenna types listed in the user guide with the maximum permissible gain and required antenna impedance for each antenna type indicated. Antenna types not included in this list, having a gain greater than the maximum gain indicated for that type, are strictly prohibited for use with this device.

Cet appareil numérique de la classe A ou B est conforme à la norme NMB-003 du Canada.

Les changements ou les modifications pas expressément approuvés par la partie responsable de la conformité ont pu vider l'autorité de l'utilisateur pour actionner l'équipement.

Concernant les EVMs avec appareils radio
Le présent appareil est conforme aux CNR d'Industrie Canada applicables aux appareils radio exempts de licence. L'exploitation est autorisée aux deux conditions suivantes : (1) l'appareil ne doit pas produire de brouillage, et (2) l'utilisateur de l'appareil doit accepter tout brouillage radioélectrique subi, même si le brouillage est susceptible d'en compromettre le fonctionnement.

Concernant les EVMs avec antennes détachables
Conformément à la réglementation d'Industrie Canada, le présent émetteur radio peut fonctionner avec une antenne d'un type et d'un gain maximal (ou inférieur) approuvé pour l'émetteur par Industrie Canada. Dans le but de réduire les risques de brouillage radioélectrique à l'intention des autres utilisateurs, il faut choisir le type d'antenne et son gain de sorte que la puissance isotrope rayonnée équivalente (p.i.r.e.) ne dépasse pas l'intensité nécessaire à l'établissement d'une communication satisfaisante.

Le présent émetteur radio a été approuvé par Industrie Canada pour fonctionner avec les types d'antenne énumérés dans le manuel d'usage et ayant un gain admissible maximal et l'impédance requise pour chaque type d'antenne. Les types d'antenne non inclus dans cette liste, ou dont le gain est supérieur au gain maximal indiqué, sont strictement interdits pour l'exploitation de l'émetteur.

【Important Notice for Users of this Product in Japan】

This development kit is NOT certified as Confirming to Technical Regulations of Radio Law of Japan

If you use this product in Japan, you are required by Radio Law of Japan to follow the instructions below with respect to this product:

1. Use this product in a shielded room or any other test facility as defined in the notification #173 issued by Ministry of Internal Affairs and Communications on March 28, 2006, based on Sub-section 1.1 of Article 6 of the Ministry's Rule for Enforcement of Radio Law of Japan,
2. Use this product only after you obtained the license of Test Radio Station as provided in Radio Law of Japan with respect to this product, or
3. Use of this product only after you obtained the Technical Regulations Conformity Certification as provided in Radio Law of Japan with respect to this product. Also, please do not transfer this product, unless you give the same notice above to the transferee. Please note that if you could not follow the instructions above, you will be subject to penalties of Radio Law of Japan.

Texas Instruments Japan Limited
(address) 24-1, Nishi-Shinjuku 6 chome, Shinjuku-ku, Tokyo, Japan

http://www.tij.co.jp
【ご使用にあたっての注】
本開発キットは技術基準適合証明を受けておりません。
本製品のご使用に際しては、電波法遵守のため、以下のいずれかの措置を取っていただく必要がありますのでご注意ください。

1. 電波法施行規則第6条第1項第1号に基づく平成18年3月28日総務省告示第173号で定められた電波暗室等の試験設備でご使用いただく。
2. 実験局の免許を取得後ご使用いただく。
3. 技術基準適合証明を取得後ご使用いただく。

なお、本製品は、上記の「ご使用にあたっての注意」を譲渡先、移転先に通知しない限り、譲渡、移転できないものとします。
上記を遵守頂けない場合は、電波法の罰則が適用される可能性があることをご留意ください。
日本テキサス・インスツルメンツ株式会社
東京都新宿区西新宿６丁目２４番１号
西新宿三井ビル
http://www.tij.co.jp

EVALUATION BOARD/KIT/MODULE (EVM)
WARNINGS, RESTRICTIONS AND DISCLAIMERS

For Feasibility Evaluation Only, in Laboratory/Development Environments. Unless otherwise indicated, this EVM is not a finished electrical equipment and not intended for consumer use. It is intended solely for use for preliminary feasibility evaluation in laboratory/development environments by technically qualified electronics experts who are familiar with the dangers and application risks associated with handling electrical mechanical components, systems and subsystems. It should not be used as all or part of a finished end product.

Your Sole Responsibility and Risk. You acknowledge, represent and agree that:

1. You have unique knowledge concerning Federal, State and local regulatory requirements (including but not limited to Food and Drug Administration regulations, if applicable) which relate to your products and which relate to your use (and/or that of your employees, affiliates, contractors or designees) of the EVM for evaluation, testing and other purposes.
2. You have full and exclusive responsibility to assure the safety and compliance of your products with all such laws and other applicable regulatory requirements, and also to assure the safety of any activities to be conducted by you and/or your employees, affiliates, contractors or designees, using the EVM. Further, you are responsible to assure that any interfaces (electronic and/or mechanical) between the EVM and any human body are designed with suitable isolation and means to safely limit accessible leakage currents to minimize the risk of electrical shock hazard.
3. You will employ reasonable safeguards to ensure that your use of the EVM will not result in any property damage, injury or death, even if the EVM should fail to perform as described or expected.
4. You will take care of proper disposal and recycling of the EVM's electronic components and packing materials.

Certain Instructions. It is important to operate this EVM within TI's recommended specifications and environmental considerations per the user guidelines. Exceeding the specified EVM ratings (including but not limited to input and output voltage, current, power, and environmental ranges) may cause property damage, personal injury or death. If there are questions concerning these ratings please contact a TI field representative prior to connecting interface electronics including input power and intended loads. Any loads applied outside of the specified output range may result in unintended and/or inaccurate operation and/or possible permanent damage to the EVM and/or interface electronics. Please consult the EVM User's Guide prior to connecting any load to the EVM output. If there is uncertainty as to the load specification, please contact a TI field representative. During normal operation, some circuit components may have case temperatures greater than 60°C as long as the input and output are maintained at a normal ambient operating temperature. These components include but are not limited to linear regulators, switching transistors, pass transistors, and current sense resistors which can be identified using the EVM schematic located in the EVM User's Guide. When placing measurement probes near these devices during normal operation, please be aware that these devices may be very warm to the touch. As with all electronic evaluation tools, only qualified personnel knowledgeable in electronic measurement and diagnostics normally found in development environments should use these EVMs.

Agreement to Defend, Indemnify and Hold Harmless. You agree to defend, indemnify and hold TI, its licensors and their representatives harmless from and against any and all claims, damages, losses, expenses, costs and liabilities (collectively, "Claims") arising out of or in connection with any use of the EVM that is not in accordance with the terms of the agreement. This obligation shall apply whether Claims arise under law of tort or contract or any other legal theory, and even if the EVM fails to perform as described or expected.

Safety-Critical or Life-Critical Applications. If you intend to evaluate the components for possible use in safety critical applications (such as life support) where a failure of the TI product would reasonably be expected to cause

severe personal injury or death, such as devices which are classified as FDA Class III or similar classification, then you must specifically notify TI of such intent and enter into a separate Assurance and Indemnity Agreement.

Mailing Address: Texas Instruments, Post Office Box 655303, Dallas, Texas 75265
Copyright © 2012, Texas Instruments Incorporated

IMPORTANT NOTICE

Texas Instruments Incorporated and its subsidiaries (TI) reserve the right to make corrections, enhancements, improvements and other changes to its semiconductor products and services per JESD46, latest issue, and to discontinue any product or service per JESD48, latest issue. Buyers should obtain the latest relevant information before placing orders and should verify that such information is current and complete. All semiconductor products (also referred to herein as “components”) are sold subject to TI’s terms and conditions of sale supplied at the time of order acknowledgment.

TI warrants performance of its components to the specifications applicable at the time of sale, in accordance with the warranty in TI’s terms and conditions of sale of semiconductor products. Testing and other quality control techniques are used to the extent TI deems necessary to support this warranty. Except where mandated by applicable law, testing of all parameters of each component is not necessarily performed.

TI assumes no liability for applications assistance or the design of Buyers’ products. Buyers are responsible for their products and applications using TI components. To minimize the risks associated with Buyers’ products and applications, Buyers should provide adequate design and operating safeguards.

TI does not warrant or represent that any license, either express or implied, is granted under any patent right, copyright, mask work right, or other intellectual property right relating to any combination, machine, or process in which TI components or services are used. Information published by TI regarding third-party products or services does not constitute a license to use such products or services or a warranty or endorsement thereof. Use of such information may require a license from a third party under the patents or other intellectual property of the third party, or a license from TI under the patents or other intellectual property of TI.

Reproduction of significant portions of TI information in TI data books or data sheets is permissible only if reproduction is without alteration and is accompanied by all associated warranties, conditions, limitations, and notices. TI is not responsible or liable for such altered documentation. Information of third parties may be subject to additional restrictions.

Resale of TI components or services with statements different from or beyond the parameters stated by TI for that component or service voids all express and any implied warranties for the associated TI component or service and is an unfair and deceptive business practice. TI is not responsible or liable for any such statements.

Buyer acknowledges and agrees that it is solely responsible for compliance with all legal, regulatory and safety-related requirements concerning its products, and any use of TI components in its applications, notwithstanding any applications-related information or support that may be provided by TI. Buyer represents and agrees that it has all the necessary expertise to create and implement safeguards which anticipate dangerous consequences of failures, monitor failures and their consequences, lessen the likelihood of failures that might cause harm and take appropriate remedial actions. Buyer will fully indemnify TI and its representatives against any damages arising out of the use of any TI components in safety-critical applications.

In some cases, TI components may be promoted specifically to facilitate safety-related applications. With such components, TI’s goal is to help enable customers to design and create their own end-product solutions that meet applicable functional safety standards and requirements. Nonetheless, such components are subject to these terms.

No TI components are authorized for use in FDA Class III (or similar life-critical medical equipment) unless authorized officers of the parties have executed a special agreement specifically governing such use.

Only those TI components which TI has specifically designated as military grade or “enhanced plastic” are designed and intended for use in military/aerospace applications or environments. Buyer acknowledges and agrees that any military or aerospace use of TI components which have ***not*** been so designated is solely at the Buyer's risk, and that Buyer is solely responsible for compliance with all legal and regulatory requirements in connection with such use.

TI has specifically designated certain components which meet ISO/TS16949 requirements, mainly for automotive use. Components which have not been so designated are neither designed nor intended for automotive use; and TI will not be responsible for any failure of such components to meet such requirements.

Products		**Applications**	
Audio	www.ti.com/audio	Automotive and Transportation	www.ti.com/automotive
Amplifiers	amplifier.ti.com	Communications and Telecom	www.ti.com/communications
Data Converters	dataconverter.ti.com	Computers and Peripherals	www.ti.com/computers
DLP® Products	www.dlp.com	Consumer Electronics	www.ti.com/consumer-apps
DSP	dsp.ti.com	Energy and Lighting	www.ti.com/energy
Clocks and Timers	www.ti.com/clocks	Industrial	www.ti.com/industrial
Interface	interface.ti.com	Medical	www.ti.com/medical
Logic	logic.ti.com	Security	www.ti.com/security
Power Mgmt	power.ti.com	Space, Avionics and Defense	www.ti.com/space-avionics-defense
Microcontrollers	microcontroller.ti.com	Video and Imaging	www.ti.com/video
RFID	www.ti-rfid.com		
OMAP Applications Processors	www.ti.com/omap	**TI E2E Community**	e2e.ti.com
Wireless Connectivity	www.ti.com/wirelessconnectivity		

Mailing Address: Texas Instruments, Post Office Box 655303, Dallas, Texas 75265
Copyright © 2012, Texas Instruments Incorporated