MSKSEMI

SEMICONDUCTOR

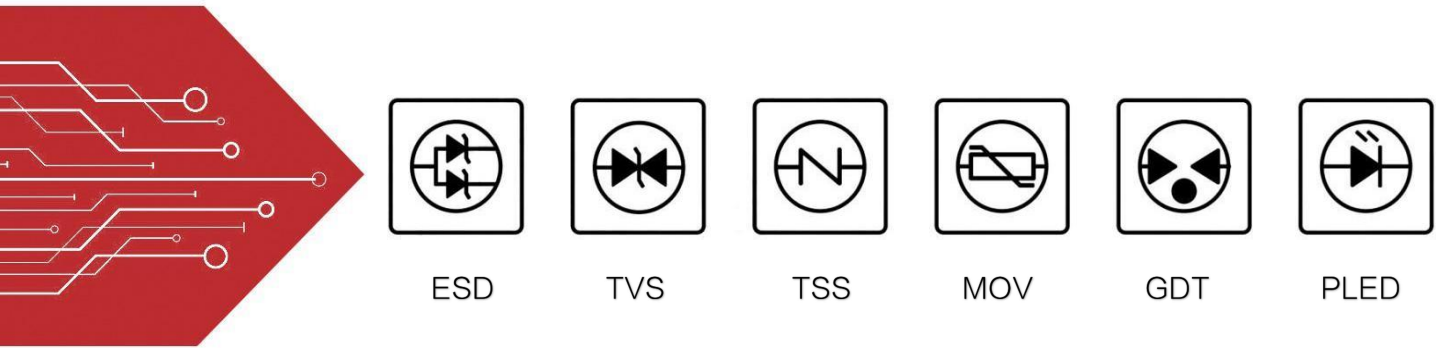

Product data sheet

PIN CONFIGURATION

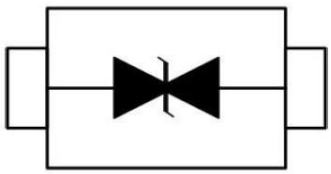



SOD-323

FEATURES

IEC61000-4-2 (ESD) ±30kV (Contact)
±30kV (Air)

- ✧ IEC61000-4-4 (EFT) 40A (5/50ηs)
- ✧ 350 Watts Peak Pulse Power per (tp=8/20μs)
- ✧ Protects one I/O line (bidirectional)
- ✧ Low clamping voltage
- ✧ Working voltages:
  3.3V,5V,8V,12V,15V,18V,20V,24V,36V
- ✧ Low leakage current

MACHANICAL DATA

- ✧ SOD-323 package
- ✧ Flammability Rating: UL 94V-0
- ✧ Packaging: Tape and Reel
- ✧ High temperature soldering guaranteed:
  260℃/10s
- ✧ Reel size: 7 inch
- ✧ MSL 1

APPLICATIONS

- ✧ Cell Phone Handsets and Accessories
- ✧ Microprocessor based equipment
- ✧ Personal Digital Assistants (PDA's)
- ✧ Notebooks, Desktops, and Servers
- ✧ Portable Instrumentation
- ✧ Networking and Telecom
- ✧ Serial and Parallel Ports.
- ✧ Peripherals

ABSOLUTE MAXIMUM RATING			
Symbol	**Parameter**	**Value**	**Units**
V_{ESD}	ESD per IEC 61000-4-2 (Contact) ESD per IEC 61000-4-2 (Air)	±30 ±30	kV
P_{PP}	Peak Pulse Power (8/20μs)	350	W
T_{OPT}	Operating Temperature	-55/+150	°C
T_{STG}	Storage Temperature	-55/+150	°C
T_L	Lead Soldering Temperature	260 (10 sec.)	°C

ELECTRICAL CHARACTERISTICS (Tamb=25°C)

P/N	MARK	V_{RWM} (V) (max.)	V_B (V) (min.)	I_T (mA)	V_C@1A (V) (max.)	V_C (V) (max.)	(@A)	I_R (μA) (max.)	C_T (pF) (max.)
SD03C	2A	3.3	4.0	1	7.5	16.0	20	40	450
SD05C	2B	5.0	6.0	1	9.8	18.0	17	10	200
SD08C	2C	8.0	8.5	1	13.4	24.0	15	2	120
SD12C	2D	12.0	13.3	1	19.0	32.0	11	1	75
SD15C	2J	15.0	16.7	1	24.0	38.0	10	1	68
SD18C	2K	18.0	20.0	1	29.0	45.0	9	1	57
SD20C	2L	20.0	22.3	1	35.0	50.0	8	1	52
SD24C	2H	24.0	26.7	1	43.0	52.0	7	1	50
SD36C	2N	36.0	40.0	1	60.0	75.0	4.5	1	35

PACKAGE MECHANICAL DATA

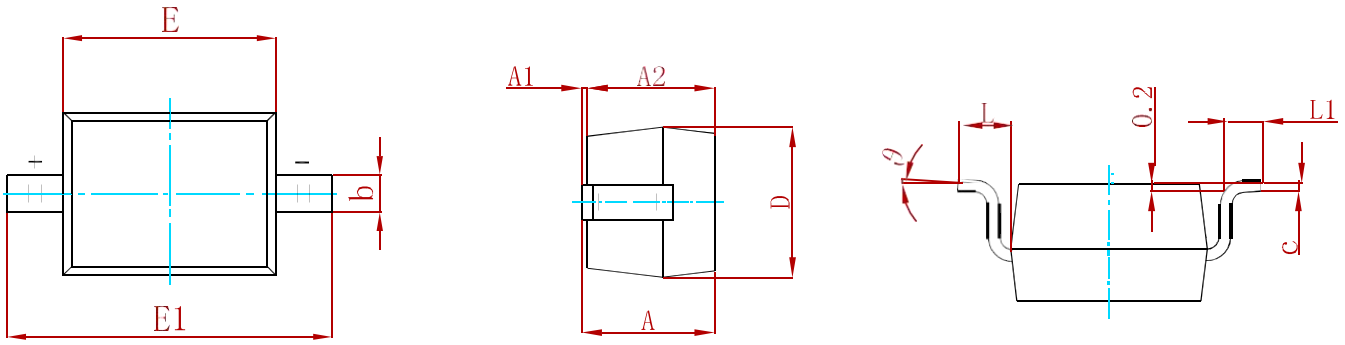

Symbol	Dimensions In Millimeters		Dimensions In Inches	
	Min.	Max.	Min.	Max.
A		1.000		0.039
A1	0.000	0.100	0.000	0.004
A2	0.800	0.900	0.031	0.035
b	0.250	0.350	0.010	0.014
c	0.080	0.150	0.003	0.006
D	1.200	1.400	0.047	0.055
E	1.600	1.800	0.063	0.071
E1	2.550	2.750	0.100	0.108
L	0.475 REF.		0.019 REF.	
L1	0.250	0.400	0.010	0.016
θ	0°	8°	0°	8°

Suggested Pad Layout

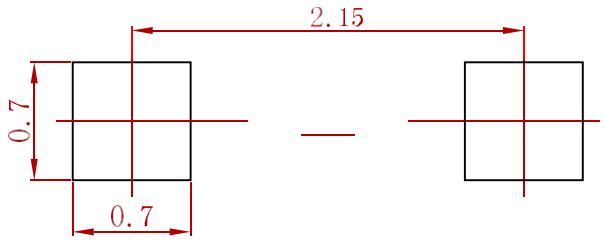

Note:
1.Controlling dimension:in millimeters.
2.General tolerance:± 0.05mm.
3.The pad layout is for reference purposes only.

REEL SPECIFICATION

P/N	PKG	QTY
SDXXC	SOD-323	3000

Attention

■ Any and all MSKSEMI Semiconductor products described or contained herein do not have specifications that can handle applications that require extremely high levels of reliability, such as life-support systems, aircraft's control systems, or other applications whose failure can be reasonably expected to result in serious physical and/or material damage. Consult with your MSKSEMI Semiconductor representative nearest you before using any MSKSEMI Semiconductor products described or contained herein in such applications.

■ MSKSEMI Semiconductor assumes no responsibility for equipment failures that result from using products at values that exceed, even momentarily, rated values (such as maximum ratings, operating condition ranges, or other parameters) listed in products specificationsof any andall MSKSEMI Semiconductor products described orcontained herein.

■ Specifications of any and all MSKSEMI Semiconductor products described or contained herein stipulate the performance, characteristics, and functions of the described products in the independent state, and are not guarantees of the performance, characteristics, and functions of the described products as mounted in the customer's products or equipment. To verify symptoms and states that cannot be evaluated in an independent device, the customer should always evaluate and test devices mounted in the customer'sproducts orequipment.

■ MSKSEMI Semiconductor. strives to supply high-quality high-reliability products. However, any and all semiconductor products fail with someprobability. It is possiblethat these probabilistic failures could give rise to accidents or events that could endanger human lives, that could give rise to smoke or fire, or that could cause damage to other property. When designing equipment, adopt safety measures so that these kinds of accidents or events cannot occur. Such measures include but are not limited to protective circuits anderror prevention circuitsfor safedesign, redundant design, and structural design.

■ In the event that any or all MSKSEMI Semiconductor products(including technical data, services) described or contained herein are controlled under any of applicable local export control laws and regulations, such products must not be exported without obtaining the export license from theauthorities concerned in accordance with the above law.

■ No part of this publication may be reproduced or transmitted in any form or by any means, electronic or mechanical, including photocopying and recording, or any information storage or retrieval system, or otherwise, without the prior written permission of MSKSEMI Semiconductor.

■ Information (including circuit diagrams and circuit parameters) herein is for example only ; it is not guaranteed for volume production. MSKSEMI Semiconductor believes information herein is accurate and reliable, but no guarantees are made or implied regarding its use or any infringementsof intellectual property rights or other rightsof third parties.

■ Any and all information described or contained herein are subject to change without notice due to product/technology improvement, etc. Whendesigning equipment, referto the "Delivery Specification" for the MSKSEMI Semiconductor productthat you intend to use.