CUI INC®

SERIES: SD-XXLP | **DESCRIPTION:** STANDARD DIN CONNECTOR

FEATURES
- locking
- metal bushing
- strain relief



RoHS

PART NUMBER KEY

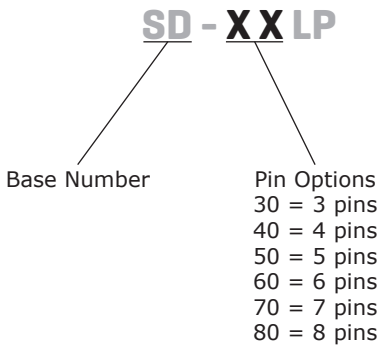

SPECIFICATIONS

parameter	conditions/description	min	typ	max	units
rated input voltage			100		Vac
rated input current				2	A
contact resistance				20	mΩ
insulation resistance	at 500 Vdc	100			MΩ
voltage withstand	at 50/60Hz for 1 minute			1000	Vac
operating temperature		-40		85	°C
RoHS	2011/65/EU				

MECHANICAL DRAWINGS

units: mm[inches]

TOLERANCE: ±0.2mm

	MATERIAL	PLATING
contact terminals	brass	silver
clip plate	cold rolled steel	nickel
body/nut	zinc alloy	nickel
screw	steel	nickel
body	zinc alloy	nickel
strain relief	PVC	
plastic core	nylon	

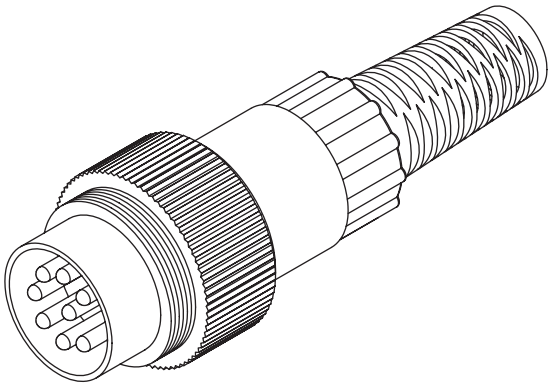

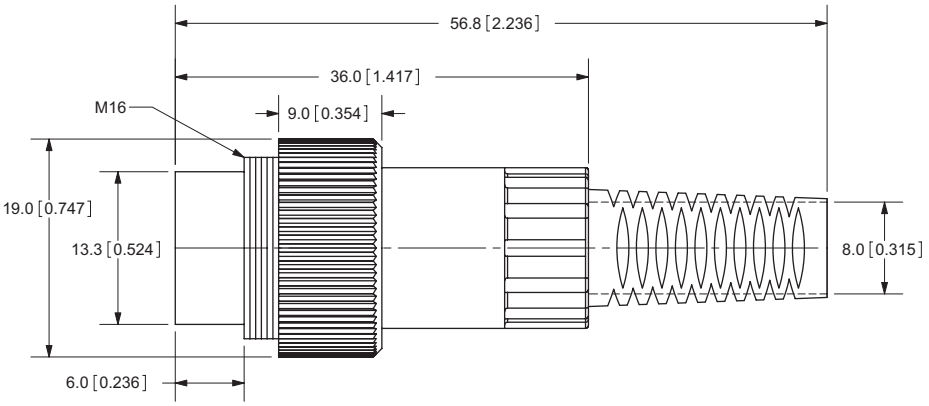

SD-30LP

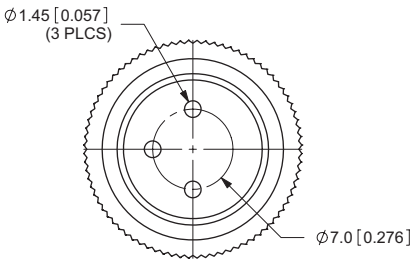

SD-40LP

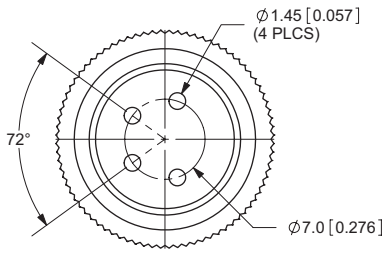

SD-50LP

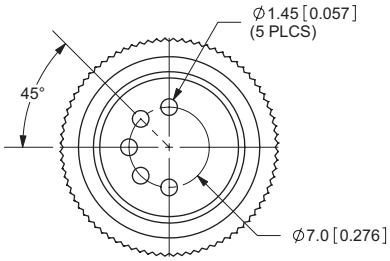

SD-60LP

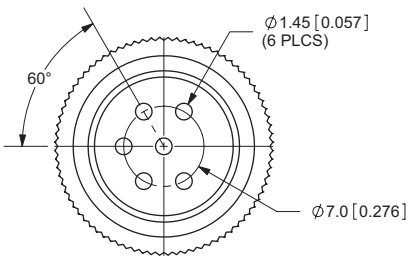

SD-70LP

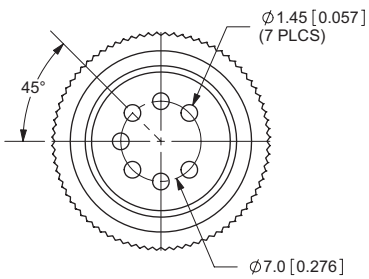

SD-80LP

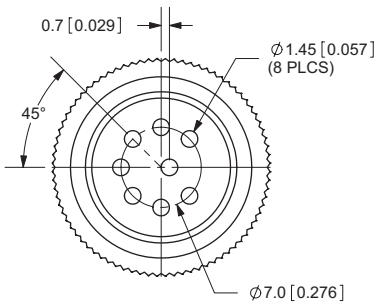

REVISION HISTORY

rev.	description	date
1.0	initial release	02/23/2006
1.01	new template applied	02/07/2012
1.02	updated datasheet	11/24/2015

The revision history provided is for informational purposes only and is believed to be accurate.

CUI INC®

Headquarters
20050 SW 112th Ave.
Tualatin, OR 97062
800.275.4899

Fax 503.612.2383
cui.com
techsupport@cui.com

CUI offers a one (1) year limited warranty. Complete warranty information is listed on our website.

CUI reserves the right to make changes to the product at any time without notice. Information provided by CUI is believed to be accurate and reliable. However, no responsibility is assumed by CUI for its use, nor for any infringements of patents or other rights of third parties which may result from its use.

CUI products are not authorized or warranted for use as critical components in equipment that requires an extremely high level of reliability. A critical component is any component of a life support device or system whose failure to perform can be reasonably expected to cause the failure of the life support device or system, or to affect its safety or effectiveness.